# WASHINGTON STATE BUILDING CODE

**CHAPTER 51-50 WAC**
Second Edition

# INTERNATIONAL BUILDING CODE 2003 Edition

Washington State Building Code Council

**Effective July 1, 2005**

Copies of the State Building Codes and
complete copies of the 2003 International Building Code
as published by the International Code Council
may be obtained from:

Washington Association of Building Officials
Post Office Box 7310
Olympia, Washington 98507-7310
(360) 586-6725 www.wabo.org
or toll free in Washington State at (888) 664-9515

Second Edition Titled
International Residential Code
Chapter 51-50 WAC
Effective July 1, 2005
Printed March 2005
First Edition based on
WSR 04-01-108, Effective July 1, 2004
Second Edition based on
WSR 05-01-014

# Preface

**Authority:** The International Building Code (Chapter 51-50 WAC) is adopted by the Washington State Building Code Council pursuant to Chapters 19.27 and 70.92 RCW. These codes were first adopted by reference by the Washington State Legislature in 1974. In 1985, the Legislature delegated the responsibility of adoption and amendment of these codes to the State Building Code Council.

**Code Precedence:** The State Building Code Act, Chapter 19.27 RCW, establishes the following order of precedence among the documents adopted as parts of the State Building Code:

International Building Code, Standards and amendments -WAC 51-50;
International Residential Code, Standards and amendments – WAC 51-51;
International Mechanical Code, Standards and amendments - WAC 51-52;
International Fire Code, Standards and amendments - WAC 51-54;
Uniform Plumbing Code, Standards and amendments - WAC 51-56, 51-57.

Where there is a conflict between codes, an earlier named code takes precedence over a later named code. In the case of conflict between the duct insulation requirements of the International Mechanical Code and the duct insulation requirements of the Energy Code, the Energy Code, or where applicable, a local jurisdiction's energy code, shall govern.

Where, in any specific case, different sections of this Code specify different materials, methods of construction or other requirements, the most restrictive shall govern. Where there is conflict between a general requirement and a specific requirement, the specific requirement shall be applicable.

Organization and Numbering: These rules are written to allow compatible use with the International Building Code. All sections which are amended, deleted, or added are referenced.

**Enforcement:** The State Building Code Act requires that each local jurisdiction enforce the State Building Code within its jurisdiction. Any jurisdiction can contract with another jurisdiction or an inspection agency to provide the mandated enforcement activities.

**Amendments to the State Building Code:**

The State Building Code Council has adopted review procedures and approval criteria for local amendments. These procedures and criteria are found in Chapter 51-04 WAC. The Council has exempted from its review any amendments to the administrative provisions of the various codes.

Forms for proposing statewide amendments to the State Building Code are available from the State Building Code Council staff.

A. **Amendments of Statewide Application:** On a yearly basis the State Building Code Council will consider proposals to amend the State Building Code. Unless directed by the State Legislature, federal mandates or court order, the Council will not enter formal rulemaking until 2006 as part of its consideration of adoption of the 2006 series of codes.

   Proposals to amend the State Building Code shall be made on forms provided by the Building Code Council.

   Code Change Proposal Submittal Deadline: March 1st of each year.

B. **Local Amendments:** Any jurisdiction may amend the State Building Code provided the amendments do not reduce the minimum performance standards of the codes. There are two areas where local amendments are limited or prohibited:

**Prohibited Amendments:** Residential provisions of the State Energy Code (WAC 51-11), the Ventilation and Indoor Air Quality Code (WAC 51-13); any provision of the International Building Code or International Residential Code affecting accessibility; and standards specifically adopted in Chapters 19.27 and 19.27A cannot be amended by any local jurisdiction.

**Residential Amendments:** Amendments by local jurisdictions which affect the construction of single family and multi-family residential buildings must be reviewed and approved by the State Building Code Council before such amendments can be enforced. The State Building Code Act provides the following definition:

**Multi-family residential building:** means common wall residential buildings that consist of four or fewer units, that do not exceed two stories in height, that are less than 5,000 square feet in area, and that have a one-hour fire-resistive occupancy separation between units.

Application forms for Council review of local amendments are available from the State Building Code Council Staff.

Washington State Building Code Council
Post Office Box 42525
Olympia, Washington 98504-2525
www.sbcc.wa.gov
(360) 725-2967 Fax (360) 586-9383
e-mail: sbcc@cted.wa.gov

**Printing Format:** This version of the rules is published as a series of insert or replacement pages. Each page provides instructions for installing them in the model code book. Amendments to the model code which are new or revised from the previous edition of this code are indicated by a line in the margin next to the revised portions.

**Effective Date:** These rules were adopted by the State Building Code Council on November 12, 2004. The rules are effective throughout the state on July 1, 2005. (This version of the code is based on WAC 51-50 as published in WSR 05-01-014. It is subject to review by the State Legislature during the 2005 session.)

**Building Permit Fees:** The activities of the State Building Code Council are supported by permit fees collected by each city and county. Section 19.27.085 of the State Building Code Act requires that a fee of $4.50 be imposed on each building permit issued by each city and county. In addition, a fee of $2.00 per unit shall be imposed for each dwelling unit after the first unit, on each building containing more than one residential unit. For the purpose of this fee, WAC 365-110-035 defines building permits as any permit to construct, enlarge, alter, repair, move, improve, remove, convert or demolish any building or structure regulated by the Building Code. Exempt from the fee are plumbing, electrical, mechanical permits, permits issued to install a mobile/manufactured home, commercial coach or factory built structure, or permits issued pursuant to the International Fire Code.

Each city and county shall remit moneys collected to the state treasury quarterly. No remittance is required until a minimum of $50.00 has accumulated.

These permit fees are the amounts current in January 2005. Such fees may be changed by the State Legislature.

**Opinions:** Only at the request of local enforcement official, the State Building Code Council may issue interpretations/opinions of those provisions of the State Building Code created by the Council, or provisions of the model codes amended by the Council. Final interpretation authority for any specific permit resides with the local enforcement official.

# Table of Contents


| Section | | Page |
|---|---|---|
| WAC 51-50-001 | Authority | A |
| WAC 51-50-002 | Purpose | A |
| WAC 51-50-003 | International Building Code | A |
| WAC 51-50-004 | Conflicts with Washington State Ventilation and Indoor Air Quality Code | A |
| WAC 51-50-005 | International Building Code Regulations for Barrier-free Accessibility | A |
| WAC 51-50-007 | Exceptions | A |
| WAC 51-50-008 | Implementation | A |
| WAC 51-50-009 | Recyclable Materials and Solid Waste Storage | A |
| **WAC 51-50-0200** | **Chapter 2 Definitions** | |
| WAC 51-50-0202 | Section 202 – Definitions | 11 |
| **WAC 51-50-0300** | **Chapter 3 Use and Occupancy Classification** | |
| WAC 51-50-0302 | Section 302 – Classification | 24 |
| WAC 51-50-0305 | Section 305 – Educational Group E | 26 |
| WAC 51-50-0308 | Section 308 – Institutional Group I | 35 |
| WAC 51-50-0310 | Section 310 – Residential Group R | 36 |
| WAC 51-50-0313 | Section 313 – Licensed Care Group LC | 37 |
| **WAC 51-50-0400** | **Chapter 4 Special Detailed Requirements Based on Use and Occupancy** | |
| WAC 51-50-0401 | Section 407 – Group I-2 | 49 |
| WAC 51-50-0419 | Section 419 – Group LC | 72 |
| **WAC 51-50-0700** | **Chapter 7 Fire-Resistance Rated Construction** | |
| WAC 51-50-0707 | Section 707 – Shaft Enclosures | 95 |
| **WAC 51-50-0900** | **Chapter 9 Special Detailed Requirements Based on Use and Occupancy** | |
| WAC 51-50-0902 | Section 902 – Definitions | 165 |
| WAC 51-50-0903 | Section 903 – Automatic Sprinkler Systems | 166 |
| WAC 51-50-0909 | Section 909 – Smoke Control Systems | 182 |
| **WAC 51-50-1000** | **Chapter 10 Means of Egress** | |
| WAC 51-50-1008 | Section 1008 – Doors, Gates and Turnstiles | 199 |
| WAC 51-50-1009 | Section 1004 – Stairways and Handrails | 206 |
| WAC 51-50-1010 | Section 1010 – Ramps | 207 |
| WAC 51-50-1024 | Section 1024 – Assembly | 222 |
| **WAC 51-50-1100** | **Chapter 11 Accessibility** | |
| WAC 51-50-1101 | Section 1101 – General | 225 |
| WAC 51-50-1103 | Section 1103 – Scoping Requirements | 226 |
| WAC 51-50-1104 | Section 1104 – Accessible Route | 227 |
| WAC 51-50-1105 | Section 1105 – Accessible Entrances | 227 |
| WAC 51-50-1106 | Section 1106 – Parking and Passenger Loading Facilities | 228 |
| WAC 51-50-1107 | Section 1107 – Dwelling Units and Sleeping Units | 229 |
| WAC 51-50-1109 | Section 1109 – Other Features and Facilities | 233 |

**WAC 51-50-1200** **Chapter 12 Interior Environment**
WAC 51-50-1203 Section 1203 – Ventilation ..... 239
WAC 51-50-1204 Section 1204 – Temperature Control ..... 240
WAC 51-50-1208 Section 1208 – Interior Space Dimensions ..... 241
WAC 51-50-1210 Section 1210 – Surrounding Materials ..... 242

**WAC 51-50-1400** **Chapter 14 Exterior Walls**
WAC 51-50-1405 Section 1405 – Installation of Wall Coverings ..... 247

**WAC 51-50-1600** **Chapter 16 Structural Design**
WAC 51-50-1605 Section 1605 – Load Combinations ..... 273

**WAC 51-50-1700** **Chapter 17 Structural Tests and Special Inspections**
WAC 51-50-1702 Section 1702 – Definitions ..... 345
WAC 51-50-1709 Section 1709 – Automatic Sprinkler Systems ..... 357

**WAC 51-50-2100** **Chapter 21 Masonry**
WAC 51-50-2107 Section 2107 – Working Stress Design ..... 418
WAC 51-50-2108 Section 2108 – Strength Design of Masonry ..... 419
WAC 51-50-2114 Section 2114 – Emission Standards ..... 436

**WAC 51-50-2900** **Chapter 29 Plumbing Systems**
WAC 51-50-2901 Section 2901 – Plumbing Code ..... 547
WAC 51-50-2902 Section 2902 – General ..... 547
WAC 51-50-2903 Section 2903 – Special Provisions ..... 547

**WAC 51-50-3000** **Chapter 30 Elevators and Conveying Systems**
WAC 51-50-3001 Section 3001 – General ..... 551
WAC 51-50-3002 Section 3002 – Hoistway Enclosures ..... 551
WAC 51-50-3003 Section 3003 – Emergency Operations ..... 551
WAC 51-50-3004 Section 3004 – Hoistway Venting ..... 552
WAC 51-50-3005 Section 3005 – Conveying Systems ..... 552
WAC 51-50-3006 Section 3006 – Machine Rooms ..... 553

**WAC 51-50-3400** **Chapter 34 Existing Structures**
WAC 51-50-3408 Section 3408 – Moved Structures ..... 568
WAC 51-50-3409 Section 3409 – Accessibility for Existing Buildings ..... 569

**WAC 51-50-3500** **Chapter 35 Referenced Standards**
WAC 51-50-32100 Washington State Building Code Standard 31-2
Standard Test Method for Particulate Emissions
from Fireplaces ..... 596

# CHAPTER 51-50 WAC
# STATE BUILDING CODE ADOPTION AND AMENDMENT OF THE 2003 EDITION OF THE INTERNATIONAL BUILDING CODE

## WAC 51-50-001 AUTHORITY

These rules are adopted under the authority of Chapter 19.27 RCW.

## WAC 51-50-002 PURPOSE

The purpose of these rules is to implement the provisions of Chapter 19.27 RCW, which provides that the State Building Code Council shall maintain the State Building Code in a status which is consistent with the purpose as set forth in RCW 19.27.020. In maintaining the codes the Council shall regularly review updated versions of the codes adopted under the act, and other pertinent information, and shall amend the codes as deemed appropriate by the Council.

## WAC 51-50-003 INTERNATIONAL BUILDING CODE

The 2003 edition of the International Building Code, including Appendix E, published by the International Code Council is hereby adopted by reference with the exceptions noted in this chapter of the Washington Administrative Code.

## WAC 51-50-004 CONFLICTS WITH WASHINGTON STATE VENTILATION AND INDOOR AIR QUALITY CODE

In the case of conflict between the ventilation requirements of Chapter 12 of this code and the ventilation requirements of Chapter 51-13 WAC, the provisions of the Ventilation and Indoor Air Quality Code shall govern.

## WAC 51-50-005 INTERNATIONAL BUILDING CODE REQUIREMENTS FOR BARRIER-FREE ACCESSIBILITY

Chapter 11 and other International Building Code requirements for barrier-free access, including ICC A117.1-2003 and Appendix E, are adopted pursuant to Chapters 70.92 and 19.27 RCW.

Pursuant to RCW 19.27.040, Chapter 11 and requirements affecting barrier-free access shall not be amended by local governments.

## WAC 51-50-007 EXCEPTIONS

The exceptions and amendments to the International Building Code contained in the provisions of Chapter 19.27 RCW shall apply in case of conflict with any of the provisions of these rules.

The provisions of this code do not apply to temporary growing structures used solely for the commercial production of horticultural plants including ornamental plants, flowers, vegetables, and fruits. “Temporary growing structure” means a structure that has the sides and roof covered with polyethylene, polyvinyl, or similar flexible synthetic material and is used to provide plants with either frost protection or increased heat retention. A temporary growing structure is not considered a building for purposes of this code.

The provisions of this code do not apply to the construction, alteration, or repair of temporary worker housing except as provided by rule adopted under chapter 70.114A RCW or chapter 37, Laws of 1998 (SB 6168). "Temporary worker housing" means a place, area, or piece of land where sleeping places or housing sites are provided by an employer for his or her employees or by another person, including a temporary worker housing operator, who is providing such accommodations for employees, for temporary, seasonal occupancy, and includes "labor camps" under RCW 70.54.110.

Codes referenced which are not adopted through RCW 19.27.031 or RCW 19.27A shall not apply unless specifically adopted by the authority having jurisdiction.

## WAC 51-50-008 IMPLEMENTATION

The International Building Code adopted under Chapter 51-50 WAC shall become effective in all counties and cities of this state on July 1, 2004.

## WAC 51-50-009 RECYCLABLE MATERIALS AND SOLID WASTE STORAGE

For the purposes of this section, the following definition shall apply:

**RECYCLED MATERIALS** means those solid wastes that are separated for recycling or reuse, such as papers, metals and glass.

All local jurisdictions shall require that space be provided for the storage of recycled materials and solid waste for all new buildings

**Exceptions:** Group R-3 and Group U Occupancies.

The storage area shall be designed to meet the needs of the occupancy, efficiency of pickup, and shall be available to occupants and haulers.

**ADULT FAMILY HOME.** See Section 310.2

**(Insert Facing Page 11)**

**CHILD DAY CARE.** See Section 310.2

**CHILD DAY CARE HOME, FAMILY.** See Section 310.2.

**(Insert Facing Page 12)**

**PORTABLE SCHOOL CLASSROOM.** See Section 902.1

**302.3 Mixed occupancies.** Where a building is occupied by two or more uses not included in the same occupancy classification, the building or portion thereof shall comply with Section 302.3.1 or 302.3.2 or a combination of these sections.

**Exceptions:**

1. Occupancies separated in accordance with Section 508.
2. Areas of Group H-2, H-3, H-4 or H-5 occupancies shall be separated from any other occupancy in accordance with Section 302.3.2.
3. Where required by Table 415.3.2, areas of Group H-1, H-2 or H-3 occupancies shall be located in a separate and detached building or structure.
4. Accessory use areas in accordance with Section 302.2.
5. Incidental use areas in accordance with Section 302.1.1.
6. Offices, mercantile, food preparation establishments for off-site consumption, personal care salons or similar uses in Group R dwelling units, which are conducted primarily by the occupants of a dwelling unit and are secondary to the use of the unit for dwelling purposes, and which do not exceed 500 square feet (46.4 $m^2$).

**(Insert Facing Page 24)**

**305.2 Day Care.** The use of a building or structure, or portion thereof, for educational, supervision or personal care services for more than five children older than 2-½ years of age, shall be classified as a Group E occupancy.

**Exception:** Family child day care homes licensed by the Washington State Department of Social and Health Services for the care of twelve or fewer children shall be classified as Group R-3.

**(Insert Facing Page 26)**

**308.2 Group I-1.** This occupancy shall include buildings, structures or parts thereof housing more than 16 persons, on a 24-hour basis, who because of age, mental disability or other reasons, live in a supervised residential environment that provides personal care services. The occupants are capable of responding to an emergency situation without physical assistance from staff. This group shall include, but not be limited to, the following:

Residential board and care facilities
Assisted living facilities
Halfway houses
Group homes
Congregate care facilities
Social rehabilitation facilities
Alcohol and drug centers
Convalescent facilities

A facility such as the above with five or fewer persons and adult family homes licensed by the Washington State Department of Social and Health Services shall be classified as a Group R-3 or shall comply with the *International Residential Code* in accordance with Section 101.2. A facility such as above, housing at least six and not more than 16 persons, shall be classified as Group R-4.

A facility such as the above providing licensed care to clients in one of the categories listed in Section 313.1 regulated by either the Washington Department of Health or the Department of Social and Health Services shall be classified as Licensed Care Group LC.

**308.3 Group I-2.** This occupancy shall include buildings and structures used for medical, surgical, psychiatric, nursing or custodial care on a 24-hour basis of more than five persons who are not capable of self-preservation. This group shall include, but not be limited to, the following:

Hospitals
Nursing homes (both intermediate-care facilities and skilled nursing facilities)
Mental hospitals
Detoxification facilities

A facility such as the above with five or fewer persons shall be classified as Group R-3 or shall comply with the *International Residential Code* in accordance with Section 101.2.

A facility such as the above providing licensed care to clients in one of the categories listed in Section 313.1 regulated by either the Washington Department of Health or the Department of Social and Health Services shall be classified as Licensed Care Group LC.

**308.5.2 Child care facility.** A facility that provides supervision and personal care on a less than 24-hour basis for more than five children 2-½ years of age or less shall be classified as Group I-4.

**Exceptions:**

1. A child day care facility that provides care for more than five but no more than 100 children 2-½ years or less of age, when the rooms where such children are cared for are located on the level of exit discharge and each of these child care rooms has an exit door directly to the exterior, shall be classified as Group E.
2. Family child day care homes licensed by the Washington State Department of Social and Health Services for the care of twelve or fewer children shall be classified as Group R-3.

**310.1 Residential Group R.** Residential Group R includes, among others, the use of a building or structure, or a portion thereof, for sleeping purposes when not classified as an Institutional Group I or Licensed Care Group LC. Residential occupancies shall include the following:

**R-1** (no changes)

**R-2** (no changes)

**R-3** Residential occupancies where the occupants are primarily permanent in nature and not classified as R-1, R-2, R-4 or I and where buildings do not contain more than two dwelling units as applicable in Section 101.2, including adult family homes and family child day care homes for the care of twelve or fewer children, licensed by the Washington State Department of Social and Health Services, or adult and child care facilities that provide accommodations for five or fewer persons of any age for less than 24 hours. Adult family homes and family child day care homes, or adult and child care facilities that are within a single-family home are permitted to comply with the International Residential Code in accordance with Section 101.2.

Foster Family Care Homes licensed by the Washington State Department of Social and Health Services shall be permitted, as an accessory use to a dwelling, for six or fewer children including those of the resident family.

**R-4** Residential occupancies shall include buildings arranged for occupancy as residential care / assisted living facilities including more than five but not more than 16 occupants, excluding staff.

**Exceptions:**

1. A facility such as the above providing licensed care to clients in one of the categories listed in Section 313.1 regulated by either the Washington Department of Health or the Department of Social and Health Services shall be classified as Licensed Care Group LC.
2. Adult family homes, family child day care homes and foster family care homes shall be classified as Group R-3.

Group R-4 occupancies shall meet the requirements for construction as defined for Group R-3 except as otherwise provided for in this code or shall comply with the International Residential Code in accordance with Section 101.2.

**ADULT FAMILY HOME** means a dwelling in which a person or persons provide personal care, special care, room and board to more than one but not more than six adults who are not related by blood or marriage to the person or persons providing the services.

**CHILD DAY CARE,** shall, for the purposes of these regulations, mean the care of children during any period of a 24 hour day.

**CHILD DAY CARE HOME, FAMILY** is a child day care facility, licensed by the state, located in the dwelling of the person or persons under whose direct care and supervision the child is placed, for the care of twelve or fewer children, including children who reside at the home.

**RESIDENTIAL CARE/ASSISTED LIVING FACILITIES.** A building or part thereof housing persons, on a 24-hour basis, who because of age, mental disability or other reasons, live in a supervised residential environment which provides personal care services that is not classified as Licensed Care Group LC. The occupants are capable of responding to an emergency situation without physical assistance from staff. This classification shall include, but not be limited to, the following: residential board and care facilities, assisted living facilities, halfway houses, group homes, congregate care facilities, social rehabilitation facilities, alcohol and drug abuse centers and convalescent facilities.

**(Insert Facing Page 36)**

## SECTION 313
## LICENSED CARE GROUP LC

**313.1 General.** Licensed Care Group LC includes the use of a building, structure, or portion thereof, for the business of providing licensed care to clients in one of the following categories regulated by either the Washington Department of Health or the Department of Social and Health Services:

1. Adult residential rehabilitation facility.
2. Alcoholism intensive inpatient treatment service.
3. Alcoholism detoxification service.
4. Alcoholism long term treatment service.
5. Alcoholism recovery house service.
6. Boarding home.
7. Group care facility.
8. Group care facility for severely and multiple handicapped children.
9. Residential treatment facility for psychiatrically impaired children and youth.

**Exception:** Where the care provided at an alcoholism detoxification service is acute care similar to that provided in a hospital, the facility shall be classified as a Group I-2 occupancy.

**(Insert Facing Page 37)**

**407.8 Locks on exit doors.** Approved, listed locks without delayed egress shall be permitted in nursing homes or portions of nursing homes, provided that:

1. The clinical needs of one or more patients require specialized security measures for their safety.
2. The doors unlock upon actuation of the automatic sprinkler system or automatic fire detection system.
3. The doors unlock upon loss of electrical power controlling the lock or lock mechanism.
4. The lock shall be capable of being deactivated by a signal from a switch located in an approved location.
5. There is a system, such as a keypad and code, in place to inform visitors, staff persons and appropriate residents how they can exit. Instructions for exiting shall be posted within six feet of the door.

**(Insert Facing Page 49)**

## SECTION 419
## GROUP LC

**419.1 General.** Occupancies in Group LC shall comply with the provisions of this section and other applicable provisions of this code.

**419.2 Area and height.** Buildings classified as Group LC shall not exceed, in area or height, the limitations set forth in Table 503 for Group R-2 Occupancies.

**Exception:** Occupancies in Group LC licensed for six or fewer clients may be of unlimited area provided they are limited to 3 stories or less.

**419.3 Exterior Walls.** For the purpose of determining required exterior wall and opening protection, LC Occupancies licensed for six or fewer clients shall comply with provisions for Group R-3 Occupancies; and all other LC Occupancies shall comply with provisions for Group R-2 Occupancies.

**419.4 Mixed Occupancies.** The code provisions applicable to Group R-2 Occupancies shall apply to Group LC Occupancies for purposes of determining whether a building is permitted to comply with Section 302.3.1, Nonseparated Uses. Where the provisions of Section 302.3.2 are applied, occupancies in Group LC shall be separated from Group H Occupancies by a four-hour fire-resistive occupancy separation and shall be separated from all other occupancies by a one-hour fire-resistive assembly.

**Exceptions:**

1. An occupancy separation need not be provided between a Group LC Occupancy licensed for 16 or fewer clients and a carport having no enclosed use above, provided the carport is entirely open on two or more sides.
2. Private garages shall be separated from Group LC occupancies and their attic areas by means of a minimum 1/2-inch (12.7 mm) gypsum board applied to the garage side. Garages beneath habitable rooms shall be separated from all habitable rooms above by not less than 5/8-inch Type X gypsum board or equivalent. Door openings between private garages and Group LC occupancies shall be equipped with either solid wood doors, or solid or honeycomb core steel doors not less than 1-3/8 inches (34.9 mm) thick, or doors in compliance with Section 715.3.3. Openings from a private garage directly into a room used for sleeping purposes shall not be permitted.
3. An occupancy separation need not be provided between a Group LC, Boarding Home Occupancy and a Group R-2 Occupancy.

**419.5 Evacuation capability.** Evacuation capability is the ability of the clients of a licensed care facility to respond to an emergency situation and either evacuate a building or move to a point of safety. Clients shall be classified in one of the following levels:

I - persons physically and mentally capable of walking or traversing a normal path to safety, including the ascent and descent of stairs, and capable of self-preservation, without the physical assistance of another person.

II - persons physically and mentally capable of traversing a normal path to safety with the use of mobility aids, but unable to ascend or descend stairs without the physical assistance of another person.

III - persons physically or mentally unable to walk or traverse a normal path to safety without the physical assistance of another person.

**419.6 Location of sleeping rooms.** In every Group LC facility, all sleeping rooms occupied by clients with an evacuation capability of II or III shall be located on a grade level floor which provides not less than two means of egress which do not require clients to use stairs, elevator, or platform lift to exit the facility.

**Exceptions:**

1. In a Group LC Occupancy licensed to provide care to two or fewer clients with an evacuation capability of II or III and six or fewer total clients, only one means of egress which does not require clients to use stairs, elevator or platform lift to exit the facility need be provided.
2. Sleeping rooms for clients with an evacuation capability of II or III may be located on floors other than at grade level, provided the facility is divided into at least two compartments by smoke barriers.

**419.7 Means of egress.** Means of egress, including provisions for emergency escape and rescue, shall be provided as specified in Chapter 10. For requirements of Chapter 10, Group LC Occupancies licensed for six or fewer clients shall comply with provisions for Group R-3 Occupancies; and all other Group LC Occupancies shall comply with provisions for Group R-2 Occupancies.

**Exceptions:**

1. Means of egress illumination required by Section 1006 need not be provided in any Group LC Occupancy licensed for six or fewer clients.
2. In LC Occupancies with an approved automatic fire sprinkler system and approved automatic fire alarm system, waiting and resting areas may be open to the corridor provided:
   - 2.1 Each rest area does not exceed 150 square feet, excluding the corridor width; and
   - 2.2 Walls defining the space shall continue the construction of the corridor's wall; and
   - 2.3 The floor on which the rest area or areas are located is divided into at least two compartments by smoke barriers; and
   - 2.4 Combustible furnishings located within the rest area are flame resistant as defined by International Building Code Section 802; and
   - 2.5 Emergency means of egress lighting is provided as required by Section 1006 to illuminate the area.

**(Insert As Page 72A)**

**419.8 Accessibility.** In new construction, Group LC occupancies, regardless of the number of clients, shall comply with accessibility standards for Group R-2 apartment buildings or dormitories as specified in Chapter 11.

Where an occupancy in Group LC is being established by change of occupancy in an existing building, the building shall be altered to comply with apartment building or dormitory provisions of Chapter 11 if any client is a person with disability. The alterations shall provide the minimum necessary access appropriate for the disabilities of clients. Any alteration, whether to accommodate a client with disability or for another purpose, shall comply with Section 3409.

**419.9 Lighting.** Occupancies in Group LC shall be provided with light as required by Section 1205 for dwelling units and exterior stairways serving dwelling units.

**419.10 Ventilation.** Occupancies in Group LC shall comply with provisions for Group R Occupancies as provided in the Washington State Ventilation and Indoor Air Quality Code (WAC 51-13).

**419.11 Ceiling Heights.** Habitable rooms, hallways, corridors, bathrooms, toilet rooms, laundry rooms and basements shall have a ceiling height of not less than 7 feet (2134 mm). The required height shall be measured from the finished floor to the lowest projection from the ceiling.

**Exceptions:**

1. In one- and two-family dwellings, beams or girders spaced not less than 4 feet (1219 mm) on center and projecting not more than 6 inches (153 mm) below the required ceiling height.
2. If any room in a building has a sloped ceiling, the prescribed ceiling height for the room is required in one-half the area thereof. Any portion of the room measuring less than 5 feet (1524 mm) from the finished floor to the ceiling shall not be included in any computation of the minimum area thereof.
3. Mezzanines constructed in accordance with Section 505.1.

**419.12 Sprinkler Systems.** An automatic sprinkler system installed in accordance with Section 903.3 shall be provided throughout all buildings with a Group LC fire area.

**Exception:** An automatic sprinkler system need not be installed if the licensed care facility is licensed for six or fewer clients.

**419.13 Fire alarm systems.** Group LC Occupancies licensed for more than 16 clients shall be provided with an approved manual and automatic fire alarm system complying with NFPA 72.

**419.14 Single- and multiple-station smoke alarms.** Listed single- and multiple-station smoke alarms shall be installed in accordance with the provisions of this code and the household fire-warning equipment provisions of NFPA 72.

**419.14.1 Where required.** Single-or multiple-station smoke alarms shall be installed and maintained in Group LC, regardless of occupant load at all of the following locations:

1. On the ceiling or wall outside of each separate sleeping area in the immediate vicinity of bedrooms.
2. In each room used for sleeping purposes.
3. In each story, including basements but not including crawl spaces and uninhabitable attics. In buildings with split levels and without an intervening door between the adjacent levels, a smoke alarm installed on the upper level shall suffice for the adjacent lower level provided that the lower level is less than one full story below the upper level.

**419.14.2 Power source.** In new construction, required smoke alarms shall receive their primary power from the building wiring where such wiring is served from a commercial source and shall be equipped with a battery backup. Smoke alarms shall emit a signal when the batteries are low. Wiring shall be permanent and without a disconnecting switch other than as required for overcurrent protection.

**419.14.3 Interconnection.** Where more than one smoke alarm is required to be installed within an individual Group LC occupancy, the smoke alarms shall be interconnected in such a manner that the activation of one alarm will activate all of the alarms in the Group LC occupancy. The alarm shall be clearly audible in all bedrooms over background noise levels with all intervening doors closed.

**419.14.4 Additions, alterations or repairs.** When the valuation of an addition, alteration or repair to a Group LC Occupancy exceeds $1,000 and a permit is required, or when one or more sleeping rooms is added or created in an existing Group LC Occupancy, smoke alarms shall be installed in accordance with Sections 419.14.1 and 419.14.2.

**Exception:** Repairs to the exterior surfaces are exempt from the requirements of this section.

**419.15 Sanitation.**

**419.15.1 General.** Sanitation facilities shall comply with Chapter 29 and the provisions of this section. Any room in which a water closet is located shall be separated from food preparation or storage rooms by a self-closing tight-fitting door.

**419.15.2 Group LC Occupancies with six or fewer clients.** Group LC Occupancies licensed for six or fewer clients shall be provided with not less than one water closet, one lavatory and one bathtub or shower.

**419.15.3 Group LC Occupancies with more than six clients.** Group LC Occupancies licensed for more than six clients shall provide not less than one water closet for each 10 male clients, or fractional part thereof, and not less than one water closet for each 8 female clients, or fractional part thereof.

In addition, not less than one lavatory shall be provided for each 12 male clients, or fractional part thereof, and not less than one lavatory for each 12 female clients, or fractional part thereof. Where the number of clients of either sex exceeds 12, one lavatory shall be added for each additional 20 males, or fractional part thereof, and one lavatory shall be added for each additional 15 females, or fractional part thereof.

In addition, not less than one bathtub or shower shall be provided for every eight clients, or fractional part thereof. Where there are female clients, one additional bathtub or shower shall be provided for each 30 female clients, or fractional part thereof. Where the number of total clients exceeds 150, one bathtub or shower shall be provided for each 20 clients, or fractional part thereof, over 150 clients.

**419.16 Concealed spaces.** Fireblocking and draftstopping shall be installed in occupancies in Group LC in accordance with the provisions of Section 717 applicable to Group R-2.

**(Insert As Page 72C)**

**707.14.1 Elevator Lobby.** Elevators opening into a fire-resistance-rated corridor as required by Section 1016.1 shall be provided with an elevator lobby at each floor containing such a corridor. The lobby shall separate the elevators from the corridor by fire partitions and the required opening protection. Elevator lobbies shall have at least one means of egress complying with Chapter 10 and other provisions within this code

**Exceptions:**

1. In office buildings, separations are not required from a street-floor elevator lobby provided the entire street floor is equipped with an automatic sprinkler system in accordance with Section 903.3.1.1.
2. Elevators not required to be located in a shaft in accordance with Section 707.2.
3. Where additional doors are provided in accordance with Section 3002.6. Such doors shall be tested in accordance with UL 1784 without an artificial bottom seal.
4. In other than Group I-3, and buildings more than four stories above the lowest level of fire department vehicle access, lobby separation is not required where the building, including the lobby and corridors leading to the lobby, is protected by an automatic sprinkler system installed throughout in accordance with Section 903.3.1.1 or 903.3.1.2.
5. In fully sprinklered buildings where elevator and stair shafts are pressurized in accordance with Section 909, elevator lobbies need not be provided. The pressurized stair shafts shall comply with the standards for elevator shaft pressurization in Section 909.6.3.

**(Insert Facing Page 95)**

**PORTABLE SCHOOL CLASSROOM.** A structure, transportable in one or more sections, which requires a chassis to be transported, and is designed to be used as an educational space with or without a permanent foundation. The structure shall be trailerable and capable of being demounted and relocated to other locations as needs arise.

**(Insert Facing Page 165)**

**903.2.1.2 Group A-2.** An automatic sprinkler system shall be provided for Group A-2 Occupancies where one of the following conditions exists:

1. The fire area exceeds 5,000 square feet (464.5m$^2$).
2. The fire area has an occupant load of 100 or more.
3. The fire area is located on a floor other than the level of exit discharge.

**903.2.2 Group E.** An automatic sprinkler system shall be provided for Group E occupancies as follows:

1. Throughout all Group E fire areas greater than 20,000 square feet (1858 m$^2$) in area.
2. Throughout every portion of educational buildings below the level of exit discharge.

   **Exception:** An automatic sprinkler system is not required in any fire area or area below the level of exit discharge where every classroom throughout the building has at least one exterior exit door at ground level.
3. Throughout all newly constructed Group E Occupancies having an occupant load of 50 or more for more than 12 hours per week or four hours in any one day. A minimum water supply meeting the requirements of NFPA 13 shall be required. The fire code official may reduce fire flow requirements for buildings protected by an approved automatic sprinkler system.

For the purpose of this section, additions exceeding 60 percent of the value of such building or structure, or alterations and repairs to any portion of a building or structure within a twelve-month period that exceeds 100 percent of the value of such building or structure shall be considered new construction. In the case of additions, fire walls shall define separate buildings.

**Exceptions:**

1. Portable school classrooms, provided aggregate area of clusters of portable school classrooms does not exceed 5,000 square feet (1465 m$^2$); and clusters of portable school classrooms shall be separated as required in Chapter 5 of the Building Code.
2. Group E Day Care.

When not required by other provisions of this chapter, a fire-extinguishing system installed in accordance with NFPA 13 may be used for increases and substitutions allowed in Section 504.2, 506.3, and Table 601 of the Building Code.

**(Insert facing page 166)**

**903.2.10.3 Buildings over 75 feet in height.** An automatic sprinkler system shall be installed throughout buildings with a floor level having an occupant load of 30 or more that is located 75 feet (22 860 mm) or more above the lowest level of fire department vehicle access.

**Exceptions:**

1. Airport control towers.
2. Open parking structures.
3. Occupancies in Group F-2.

**(Insert Facing Page 168)**

**909.6.3.3 Separation.** Elevator shaft pressurization equipment and its ductwork located within the building shall be separated from other portions of the building by construction equal to that required for the elevator shaft.

**909.6.3.4 Location of intakes.** Elevator shaft pressurization air intakes shall be located in accordance with Section 909.10.3. Such intakes shall be provided with smoke detectors which upon detection of smoke, shall deactivate the pressurization fan supplied by that air intake.

**909.6.3.5 Power systems.** The power source for the fire alarm system and the elevator shaft pressurization system shall be in accordance with Section 909.11.

**909.6.3.6 Hoistway venting.** Hoistway venting required by Section 3004 need not be provided for pressurized elevator shafts.

**909.6.3.7 Machine rooms.** Elevator machine rooms required to be pressurized by Section 3006.3 need not be pressurized where separated from the hoistway shaft by construction in accordance with Section 707.

**909.6.3.8 Special inspection.** Special inspection shall be required in accordance with Section 909.18.8.3 and Section 1704.

**909.6.3 Elevator Shaft Pressurization.** Where elevator shaft pressurization is required to comply with Exception 5 of Section 707.14.1, the pressurization system shall comply with the following.

**909.6.3.1 Standards and testing.** Elevator shafts shall be pressurized to not less than 0.10 inch water column relative to atmospheric pressure. Elevator pressurization shall be measured with the elevator cars at the designated primary recall level with the doors in the open position. The test shall be conducted at the location of the calculated maximum positive stack effect in the elevator shaft. The measured pressure shall be sufficient to provide 0.10 inch of water column as well as accounting for the stack and wind effect expected on the mean low temperature January day.

**909.6.3.2 Activation.** The elevator shaft pressurization system shall be activated by a fire alarm system which shall include smoke detectors or other approved detectors located near the elevator shaft on each floor as approved by the building official and fire chief. If the building has a fire alarm panel, detectors shall be connected to, with power supplied by, the fire alarm panel.

**1008.1.2 Door Swing.** Egress doors shall be side-hinged swinging.

**Exceptions:**

1. Private garages, office areas, factory and storage areas with an occupant load of 10 or less.
2. Group I-3 Occupancies used as a place of detention.
3. Doors within or serving a single dwelling unit in Groups R-2 and R-3 as applicable in Section 101.2.
4. In other than Group H Occupancies, revolving doors complying with Section 1008.1.3.1.
5. In other than Group H Occupancies, horizontal sliding doors complying with Section 1008.1.3.3 are permitted as a means of egress.
6. Power operated doors in accordance with Section 1008.1.3.1.

Doors shall swing in the direction of egress travel where serving an occupant load of 50 or more persons or a Group H Occupancy.

The opening force for interior side-swinging doors without closers shall not exceed a 5-pound force. For other side-swinging, sliding, and folding doors, the door latch shall release when subjected to a 15-pound force. The door shall be set in motion when subjected to a 30-pound force. The door shall swing to a full-open position when subjected to a 15-pound force. Forces shall be applied to the latch side. Within an accessible route, at exterior doors where environmental conditions require a closing pressure greater than 8.5 pounds, power operated doors shall be used within the accessible route of travel.

**1009.13** Stairs or ladders within an individual dwelling unit used to gain access to areas of 200 square feet (18.6 $m^2$) or less, and not containing the primary bathroom or kitchen, are exempt from the requirements of Section 1009.

**(Insert Facing Page 206)**

**1010.8 Handrails.** Ramps with a rise greater than 6 inches (152 mm) shall have handrails on both sides complying with Section 1009.11. At least one handrail shall extend in the direction of ramp run not less than 12 inches (305 mm) horizontally beyond the top and bottom of the ramp runs.

**(Insert Facing Page 207)**

**1024.11 Assembly aisle walking surfaces.** Aisles with a slope not exceeding one unit vertical in eight units horizontal (12.5-percent slope) shall consist of a ramp having a slip-resistant walking surface. Aisles with a slope exceeding one unit vertical in eight units horizontal (12.5-percent slope) shall consist of a series of risers and treads that extends across the full width of aisles and complies with Sections 1024.11.1 through 1024.11.3.

**Exception:** When provided with fixed seating, aisles in Group A-1 occupancies shall be permitted to have a slope not steeper than one unit vertical in five units horizontal (20-percent slope).

**1024.13 Handrails.** Ramped aisles having a slope exceeding one unit vertical in 15 units horizontal (6.7-percent slope) and aisle stairs shall be provided with handrails located either at the side or within the aisle width.

**Exceptions:**

1. Handrails are not required for ramped aisles having a gradient no greater than one unit vertical in five units horizontal (20 percent slope) and seating on both sides.
2. Handrails are not required if, at the side of the aisle, there is a guard that complies with the graspability requirements of handrails.

**(Insert Facing Page 222)**

**1101.2 Design.** Buildings and facilities shall be designed and constructed to be accessible in accordance with this code and ICC A117.1, except those portions of ICC A117.1 amended by this section.

**1101.2.1 (ICC A117.1 Section 403) Landings for walking surfaces.** The maximum rise for any run is 30 inches (762 mm). Landings shall be provided at the top and bottom of any run. Landings shall be level and have a minimum dimension measured in the direction of travel of not less than 60 inches (1525 mm).

**1101.2.2 (ICC A117.1 Section 403.5) Clear width of accessible route.** Clear width of an accessible route shall comply with ICC A117.1 Table 403.5. For exterior routes of travel, the minimum clear width shall be 44 inches (1118 mm).

**1101.2.3 (ICC A117.1 Section 404.2.9) Door-Opening Force.** Fire doors shall have the minimum opening force allowable by the appropriate administrative authority. The maximum force for pushing open or pulling open doors other than fire doors shall be as follows:

Interior hinged door: 5.0 pounds (22.2 N)
Sliding or folding doors 5.0 pounds (22.2 N)

At exterior doors where environmental conditions require a closing pressure greater than 8.5 (37.8 N) pounds, power operated doors shall be used within the accessible route of travel.

These forces do not apply to the force required to retract latch bolts or disengage other devices that hold the door in a closed position.

**1101.2.4 Reserved**.

**1101.2.5 (ICC A117.1 Sections 603.4 and 604.11) Coat hooks, shelves, dispensers, and other fixtures.** Coat hooks provided shall accommodate a forward reach or side reach complying with ICC A117.1 Section 308. Where provided, shelves shall be installed so that the top of the shelf is 40 inches (1015 mm) maximum above the floor or ground. Drying equipment, towel or other dispensers, and disposal fixtures shall be located 40 inches maximum above the floor or ground to any rack, operating controls, receptacle or dispenser.

**1101.2.6 (ICC A117.1 Section 604.6) Flush controls.** Hand operated flush controls for water closets shall be mounted not more than 44 inches (1118 mm) above the floor.

**1101.2.7 Reserved.**

**1101.2.8 Reserved.**

**1101.2.9 (ICC A117.1 Section 703.6.3.1) International symbol of accessibility.** Where the International Symbol of Accessibility is required, it shall be proportioned complying with ICC A117.1 Figure 703.7.2.1. All interior and exterior signs depicting the International Symbol of Accessibility shall be white on a blue background.

**1101.2.10 Reserved.**

**1101.2.11 (ICC A117.1 Section 404.3.5) Control switches.** Control switches shall be mounted 32 to 40 inches (815 to 1015 mm) above the floor and not less than 18 inches (455 mm) nor more than 36 (915 mm) inches horizontally from the nearest point of travel of the moving doors.

**1103.2.15 Modifications.** Where full compliance with this chapter is impractical due to unique characteristics of the terrain, the building official is permitted to grant modifications in accordance with Section 104.10, provided that any portion of the building or structure that can be made accessible shall be made accessible to the greatest extent practical.

**(Insert Facing Page 226)**

**1104.4 Multilevel buildings and facilities.** At least one accessible route shall connect each accessible level, including mezzanines, in multilevel buildings and facilities.

**Exceptions:**

1. An accessible route is not required to stories and mezzanines above and below accessible levels that have an aggregate area of not more than 3,000 square feet. This exception shall not apply to:
   - 1.1 Multiple tenant facilities of Group M occupancies containing five or more tenant spaces;
   - 1.2 Levels containing offices of health care providers (Group B or I);
   - 1.3 Passenger transportation facilities and airports (Group A-3 or B); or
   - 1.4 Buildings owned or leased by government agencies.
2. In Group A, I, R and S occupancies, levels that do not contain accessible elements or other spaces required by Section 1107 or 1108 are not required to be served by an accessible route from an accessible level.
3. In air traffic control towers, an accessible route is not required to serve the cab and floor immediately below the cab.
4. Where a two-story building or facility has one story with an occupant load of five or fewer persons that does not contain public use space, that story shall not be required to be connected by an accessible route to the story above or below.

**1105.1 Public entrances.** In addition to accessible entrances required by Sections 1105.1.1 through 1105.1.6, at least 50 percent of all public entrances shall be accessible. All exterior exits which are located adjacent to accessible areas and within 6 inches (152 mm) of grade shall be accessible.

**Exceptions:**

1. An accessible entrance is not required in areas not required to be accessible.
2. Loading and service entrances that are not the only entrance to a tenant space.

**(Insert Facing Page 227)**

**1106.6 Location.** Accessible parking spaces shall be located on the shortest accessible route of travel from adjacent parking to an accessible building entrance. Accessible parking spaces shall be dispersed among the various types of parking facilities provided. In parking facilities that do not serve a particular building, accessible parking spaces shall be located on the shortest route to an accessible pedestrian entrance to the parking facility. Where buildings have multiple accessible entrances with adjacent parking, accessible parking spaces shall be dispersed and located
near the accessible entrances. Wherever practical, the accessible route of travel shall not cross lanes of vehicular traffic. Where crossing traffic lanes is necessary, the route of travel shall be designated and marked as a crosswalk.

**Exception:** In multilevel parking structures, van accessible parking spaces are permitted on one level.

**1106.7.4 Sheltered Entrance.** In Group I-2 occupancies, at least one accessible entrance that complies with Section 1105 shall be under shelter. Every such entrance shall include a passenger loading zone which complies with Section 1106.7.

**1106.3 Outpatient medical care facilities.** For Group I-1 and I-2 occupancies providing outpatient medical care facilities, 10 percent, but not less than one, of the parking spaces provided accessory to such occupancies shall be accessible.

**1106.4 Inpatient and outpatient medical care facilities.** For Group I-1 and I-2 units and facilities specializing in the treatment of persons with mobility impairments on either an inpatient or outpatient basis, 20 percent, but not less than one, of the parking spaces provided accessory to such units and facilities shall be accessible.

**(Insert Facing Page 228)**

**1107.6 Group R.** Occupancies in Group R shall be provided with accessible features in accordance with Sections 1107.6.1. through 1107.6.4. Accessible and Type A units shall be apportioned among efficiency dwelling units, single bedroom units and multiple bedroom units, in proportion to the numbers of such units in the building. Accessible hotel guest rooms shall be apportioned among the various classes of sleeping accommodations.

**(Insert Facing Page 229)**

**1107.6.2.1.1 Type A units.** In occupancies in Group R-2 containing more than 10 dwelling units or sleeping units, at least 5 percent, but not less than one, of the units shall be a Type A unit. All units on a site shall be considered to determine the total number of units and the required number of Type A units. Type A units shall be dispersed among the various classes of units.

**Exceptions:**

1. The number of Type A units is permitted to be reduced in accordance with Section 1107.7.
2. Existing structures on a site shall not contribute to the total number of units on a site.

**(Insert Facing Page 230)**

**1109.5 Drinking fountains.** On floors where drinking fountains are provided, at least 50 percent, but not less than one fountain, shall be accessible. At least one fountain shall be mounted at a standard height.

**1109.6 Elevators.** Passenger elevators on an accessible route shall be accessible and comply with ICC A117.1. Elevators required to be accessible shall be designed and constructed to comply with Chapter 296-96 of the Washington Administrative Code.

**(Insert Facing Page 234)**

**1109.9 Detectable warnings.** Passenger transit platform edges bordering a drop-off and not protected by platform screens or guards shall have a detectable warning. Curb ramps shall have detectable warnings.

**Exception:** Detectable warnings are not required at bus stops.

**(Insert Facing Page 235)**

**1109.14.3 Other occupancies.** All recreational facilities not falling within the purview of Section 1109.14.1 or 1109.14.2 shall be accessible as required by the Americans with Disabilities Act Accessibility Guidelines.

**(Insert Facing Page 236)**

**1203.1 General.** Buildings shall be provided with natural ventilation in accordance with Section 1203.4, or mechanical ventilation in accordance with the *International Mechanical Code* and the Washington State Ventilation and Indoor Air Quality Code.

**(Insert Facing Page 239)**

**1203.4 Natural ventilation.** For other than Group R occupancies in buildings four stories and less, natural ventilation of an occupied space shall be through windows, doors, louvers or other openings to the outdoors. The operating mechanism for such openings shall be provided with ready access so that the openings are readily controllable by the building occupants. Group R occupancies in buildings four stories and less shall comply with the Washington State Ventilation and Indoor Air Quality Code.

**1204.2 Heating.**

**1204.2.1 Definitions.** For the purposes of this section only, the following definitions apply.

**DESIGNATED AREAS** are those areas designated by a county to be an urban growth area in Chapter 36.70A RCW and those areas designated by the US Environmental Protection Agency as being in nonattainment for particulate matter.

**SUBSTANTIALLY REMODELED** means any alteration or restoration of a building exceeding 60 percent of the appraised value of such building within a 12 month period. For the purpose of this section, the appraised value is the estimated cost to replace the building and structure in kind, based on current replacement costs.

**1204.2.2 Primary Heating Source.** Primary heating sources in all new and substantially remodeled buildings in designated areas shall not be dependent upon wood stoves.

**1204.2.3 Solid Fuel Burning Devices.** No used solid fuel burning device shall be installed in new or existing buildings unless such device is United States Environmental Protection Agency certified or a pellet stove either certified or exempt from certification by the United States Environmental Protection Agency.

**Exception:** Antique wood cook stoves and heaters manufactured prior to 1940.

**(Insert Facing Page 240)**

**1208.2 Minimum ceiling heights.** Occupiable spaces and habitable spaces shall have a ceiling height of not less than 7 feet 6 inches (2286 mm). Bathrooms, toilet rooms, kitchens, storage rooms and laundry rooms shall be permitted to have a ceiling height of not less than 7 feet (2134 mm). ⇐

**Exceptions:**

1. In one- and two-family dwellings, beams or girders spaced not less than 4 feet (1219 mm) on center and projecting not more than 6 inches (152 mm) below the required ceiling height.
2. If any room in a building has a sloped ceiling, the prescribed ceiling height for the room is required in one-half the area thereof. Any portion of the room measuring less than 5 feet (1524 mm) from the finished floor to the ceiling shall not be included in any computation of the minimum area thereof.
3. Mezzanines constructed in accordance with Section 505.1
4. Residential Group R Occupancies shall be permitted to have a ceiling height of not less than 7 feet (2134 mm).

**1208.3 Room area.** Every dwelling unit shall have at least one room that shall have not less than 120 square feet (13.9 $m^2$) of net floor area. Other habitable rooms shall have a net floor area of not less than 70 square feet (6.5 $m^2$).

**Exception:** Every kitchen in a one- and two-family dwelling shall have not less than 50 square feet (4.64 $m^2$) of gross floor area.

Portions of a room with a sloped ceiling measuring less than 5 feet (1524 mm) or a flat ceiling measuring less than 7 feet (2134 mm) from the finished floor to the finished ceiling shall not be considered as contributing to the minimum habitable area for that room.

**(Insert Facing Page 241)**

**1210.5 Toilet rooms**. This section is not adopted. (The requirements of this section have been moved to Section 2902.2.1.1)

**(Insert Facing Page 242)**

**1405.5.2 Seismic requirements.** Anchored masonry veneer located in Seismic Design Category C, D, E, or F shall conform to the requirements of Section 6.2.2.10, except Section 6.2.2.10.2.2, of the ACI 530/ASCE 5/TMS 402.

**(Insert Facing Page 247)**

**1605.3.1.1 Load reduction.** It is permitted to multiply the combined effect of two or more variable loads by 0.75 and add to the effect of dead load. The combined load used in design shall not be less than the sum of the effects of dead load and any one of the variable loads. ⇐

Increases in allowable stresses specified in the appropriate materials section of this code or referenced standard shall not be used with the load combinations of Section 1605.3.1 except that a duration of load increase shall be permitted in accordance with Chapter 23.

**(Insert Facing Page 273)**

**STRUCTURAL OBSERVATION.** The visual observation of the structural system by a registered design professional for general conformance to the approved construction documents. Structural observation does not include or waive the responsibility for the inspection required by Section 109, 1704, or other sections of this code. ⇐

**(Insert Facing Page 345)**

**1709.1 Structural observations.** Structural observations shall be provided for those structures included in Seismic Design Category D, E or F, as determined in Section 1616, where one or more of the following conditions exist:

1. The structure is included in Seismic Use Group II or III,
2. The height of the structure is greater than 75 feet (22 860 mm) above the base,
3. The structure is in Seismic Design Category E and Seismic Use Group I and greater than two stories in height,
4. When so designated by the registered design professional in responsible charge of the design,
5. When such observation is specifically required by the building official for unusual lateral force-resisting structures or irregular structures as defined in Section 1616.

Structural observations shall also be provided for those structures sited where the basic wind speed exceeds 110 mph (49 m/sec) determined from Figure 1609, where one or more of the following conditions exist:

1. The structure is included in Category III or IV according to Table 1604.5,
2. The height of the structure is greater than 75 feet (22 860 mm),
3. When so designated by the registered design professional in responsible charge of the design,
4. When such observation is specifically required by the building official for unusual main windforce-resisting structures.

The owner shall employ a registered design professional to perform structural observations as defined in Section 1702.

Deficiencies shall be reported in writing to the owner and the building official. At the conclusion of the work included in the permit, the structural observer shall submit to the building official a written statement that the site visits have been made and identify any reported deficiencies which, to the best of the structural observer's knowledge, have not been resolved.

**(Insert Facing Page 357)**

**2107.2.3 ACI 530/ASCE 5/TMS 402, Section 2.1.10.6.1.1, lap splices.** In regions of moment where the design tensile stresses in the reinforcement are greater than 80 percent of the allowable steel stress Fs, the lap length determined by Equation (2.9) shall be increased by 50 percent.

**(Insert Facing Page 418)**

**2108.2 ACI 530/ASCE 5/TMS 402, Section 3.1.6.** Modify Section 3.1.6 as follows:

3.1.6 Headed and bent-bar anchor bolts. All embedded bolts shall be grouted in place, except that 1/4 inch (6.4 mm) diameter bolts are permitted to be placed in bed joints that are at least 1/2 inch (12.7 mm) in thickness.

(Existing Section 2108.2 and remaining sections are renumbered)

**(Insert Facing Page 419)**

## SECTION 2114
## EMISSION STANDARDS

**2114.1 Emission Standards for Factory-built Fireplaces.** After January 1, 1997, no new or used factory-built fireplace shall be installed in Washington State unless it is certified and labeled in accordance with procedures and criteria specified in the Washington State Building Code Standard 31-2.

To certify an entire fireplace model line, the internal assembly shall be tested to determine its particulate matter emission performance. Retesting and recertifying is required if the design and construction specifications of the fireplace model line internal assembly change. Testing for certification shall be performed by a Washington State Department of Ecology (DOE) approved and U. S. Environmental Protection Agency (EPA) accredited laboratory.

**2114.2 Emission Standards for Certified Masonry and Concrete Fireplaces.** After January 1, 1997, new certified masonry or concrete fireplaces installed in Washington State shall be tested and labeled in accordance with procedures and criteria specified in the Washington State Building Code Standard 31-2.

To certify an entire fireplace model line, the internal assembly shall be tested to determine its particulate matter emission performance. Retesting and recertifying is required if the design and construction specifications of the fireplace model line internal assembly change. Testing for certification shall be performed by a Washington State Department of Ecology (DOE) approved and U. S. Environmental Protection Agency (EPA) accredited laboratory.

**(Insert Facing Page 436)**

# Chapter 29 - PLUMBING SYSTEMS
(This chapter replaces IBC Chapter 29 in its entirety)

## SECTION 2901
## PLUMBING CODE

Plumbing systems shall comply with the Plumbing Code.

## SECTION 2902
## GENERAL

**2902.1 Number of fixtures.**

**2902.1.1 Requirements.** Plumbing fixtures shall be provided in the minimum number shown in Table 2902.1 and in this Chapter. Where the proposed occupancy is not listed in Table 2902.1, the building official shall determine fixture requirements based on the occupancy which most nearly resembles the intended occupancy.

Plumbing fixtures need not be provided for unoccupied buildings or facilities.

**2902.1.2 Private offices.** Fixtures only accessible to private offices shall not be counted to determine compliance with this section.

**2902.1.3 Occupancy load distribution.** The occupant load shall be divided equally between the sexes, unless data approved by the building official indicates a different distribution of the sexes.

**2902.1.4 Food preparation areas.** In food preparation, serving and related storage areas, additional fixture requirements may be dictated by health codes.

**2902.1.5 Other requirements.** For other requirements for plumbing facilities, see Sections 419.15, 1210 and Chapter 11.

**2902.2 Access to fixtures.**

**2902.2.1 Location.** Plumbing fixtures shall be located in each building or conveniently in a building adjacent thereto on the same property.

**2902.2.1.1 Toilet rooms.** Toilet rooms shall not open directly into a room used for the preparation of food for service to the public.

**2902.2.2 Multiple tenants.** Access to toilets serving multiple tenants shall be through a common use area and not through an area controlled by a tenant.

**2902.2.3 Multistory buildings.** Required fixtures shall not be located more than one vertical story above or below the area served.

**2902.3 Separate facilities.**

**2902.3.1 Requirements.** Separate toilet facilities shall be provided for each sex.

**Exception:** In occupancies serving 15 or fewer persons, one toilet facility designed for use by no more than one person at a time shall be permitted for use by both sexes.

⇒

**2902.3.2 Food service establishments.** When customers and employees share the same facilities, customers accessing the facilities are excluded from food preparation and storage areas.

**2902.4 Pay facilities.** Required facilities shall be free of charge. Where pay facilities are installed, they shall be in addition to the minimum required facilities.

**2902.5** is not adopted.

**2902.6** is not adopted.

## SECTION 2903
## SPECIAL PROVISIONS

**2903.1 Dwelling units.** Dwelling units shall be provided with a kitchen sink.

**2903.2 Water closet space requirements.** The water closet stool in all occupancies shall be located in a clear space not less than 30 inches (762 mm) in width, with a clear space in front of the stool of not less than 24 inches (610 mm).

**2903.3 Water.** Each required sink, lavatory, bathtub and shower stall shall be equipped with hot and cold running water necessary for its normal operation.

**2903.4 Drinking fountains.**

**2903.4.1 Number.** Occupant loads over 30 shall have one drinking fountain for the first 150 occupants, then one per each additional 500 occupants.

**Exceptions:**

1. Sporting facilities with concessions serving drinks shall have one drinking fountain for each 1000 occupants.
2. A drinking fountain need not be provided in a drinking or dining establishment.

**2903.4.2 Multistory buildings.** Drinking fountains shall be provided on each floor having more than 30 occupants in schools, dormitories, auditoriums, theaters, offices and public buildings.

**2903.4.3 Penal Institutions.** Penal institutions shall have one drinking fountain on each cell block floor and one on each exercise floor.

**2903.4.4 Location.** Drinking fountains shall not be located in toilet rooms.

## TABLE 2902.1 – MINIMUM PLUMBING FIXTURES [1,2,4,6]

| TYPE OF BUILDING OR OCCUPANCY[8] | WATER CLOSETS (fixtures per person) MALE[3] | WATER CLOSETS (fixtures per person) FEMALE | LAVATORIES[5] (fixtures per person) MALE | LAVATORIES[5] (fixtures per person) FEMALE | BATHTUB OR SHOWER (fixtures per person) |
|---|---|---|---|---|---|
| For the occupancies listed below, use 30 square feet (2.79 m²) per occupant for the minimum number of plumbing fixtures. | | | | | |
| **Group A**<br>Assembly places -- Conference rooms, dining rooms, drinking establishments, exhibit rooms, gymnasiums, lounges, stages and similar uses including restaurants classified as Group B Occupancies | 1:1-25<br>2:26-75<br>3:76-125<br>4:126-200<br>5:201-300<br>6:301-400<br>Over 400, add one fixture for each additional 200 males or 150 females. | 1:1-25<br>2:26-75<br>3:76-125<br>4:126-200<br>5:201-300<br>6:301-400 | one per 2 water closets | | |
| For the assembly occupancies listed below, use the number of fixed seating or, where no fixed seating is provided, use 15 square feet (1.39 m²) per occupant for the minimum number of plumbing fixtures. | | | | | |
| Assembly places -- Theaters, auditoriums, convention halls, dance floors, lodge rooms, casinos, and such places which have limited time for fixture use (intermissions) | 1:1-100<br>2:101-200<br>3:201-400<br>Over 400, add one fixture for each additional 250 males or 50 females. | One per 25 up to 400 | 1:1-200<br>2:201-400<br>3:401-750<br>Over 750, add one fixture for each additional 500 persons. | 1:1-200<br>2:201-400<br>3:401-750 | |
| Assembly places -- Stadiums, arena and other sporting facilities where fixture use is not limited to intermissions. | 1:1-100<br>2:101-200<br>3:201-400<br>Over 400, add one fixture for each additional 300 males or 100 females. | One per 50 up to 400 | 1:1-200<br>2:201-400<br>3:401-750<br>Over 750, add one fixture for each additional 500 persons. | 1:1-200<br>2:201-400<br>3:401-750 | |
| For the assembly occupancies listed below, use the number of fixed seating or, where no fixed seating is provided, use 30 square feet (2.79 m²) per occupant for the minimum number of plumbing fixtures. | | | | | |
| Worship places<br>Principal assembly area<br>Educational & activity unit | <br>one per 150<br>one per 125 | <br>one per 75<br>one per 75 | <br>one per 2 water closets<br>one per 2 water closets | | |
| For the occupancies listed below, use 200 square feet (18.58 m²) per occupant for the minimum number of plumbing fixtures | | | | | |
| **Group B**<br>and other clerical or administrative employee accessory use | 1:1-15<br>2:16-35<br>3:36-55<br>Over 55, add one for each additional 50 persons. | 1:1-15<br>2:16-35<br>3:36-55 | one per 2 water closets | | |
| For the occupancies listed below, use 100 square feet ( 9.3 m²) per student for the minimum number of plumbing fixtures. | | | | | |
| **Group E**<br>Schools -- for staff use<br>All schools<br>(One staff per 20 students) | 1:1-15<br>2:16-35<br>3:36-55<br>Over 55, add one fixture for each additional 40 persons. | 1:1-15<br>2:16-35<br>3:36-55 | one per two water closets | | |
| Schools -- for student use<br>Day care | 1:1-20<br>2:21-50<br>Over 50, add one fixture for each additional 50 persons. | 1:1-20<br>2:21-50 | 1:1-20<br>2:21-50<br>Over 50, add one fixture for each additional 50 persons. | 1:1-20<br>2:21-50 | |
| Elementary | one per 30 | one per 25 | one per two water closets | | |
| Secondary | one per 40 | one per 30 | one per two water closets | | |

**(Insert Replacing Page 548)**

## TABLE 2902.1 – MINIMUM PLUMBING FIXTURES [1,2,4,6]
**(Continued)**

| TYPE OF BUILDING OR OCCUPANCY[8] | WATER CLOSETS (fixtures per person) MALE[3] | WATER CLOSETS (fixtures per person) FEMALE | LAVATORIES[5] (fixtures per person) MALE | LAVATORIES[5] (fixtures per person) FEMALE | BATHTUB OR SHOWER (fixtures per person) |
|---|---|---|---|---|---|
| For the occupancies listed below, use 50 square feet (4.65 m²) per occupant for the minimum number of plumbing fixtures. | | | | | |
| **Education Facilities other than Group E**<br>Others (colleges, universities, adult centers, etc.) | one per 40 | one per 25 | one per two water closets | | |
| For the occupancies listed below, use 2,000 square feet (185.8 m²) per occupant for the minimum number of plumbing fixtures. | | | | | |
| **Group F and Group H**<br>Workshop, foundries and similar establishments, and hazardous occupancies | 1:1-10<br>2:11-25<br>3:26-50<br>4:51-75<br>5:76-100<br>Over 100, add one fixture for each additional 30 persons. | 1:1-10<br>2:11-25<br>3:26-50<br>4:51-75<br>5:76-100 | one per two water closets | | one shower for each 15 persons exposed to excessive heat or to skin contamination with irritating materials |
| For the occupancies listed below, use the designated application and 200 square feet (18.58 m²) per occupant of the general use area for the minimum number of plumbing fixtures. | | | | | |
| **Group I** [7]<br>Hospital waiting rooms | one per room (usable by either sex) | | one per room | | |
| Hospital general use areas | 1:1-15<br>2:16-35<br>3:36-55<br>Over 55, add one fixture for each additional 40 persons. | 1:1-15<br>3:16-35<br>4:36-55 | one per two water closets | | |
| **Hospital patient rooms:**<br>Single Bed | one adjacent to and directly accessible from | | one per toilet room | | one per toilet room |
| Isolation | one adjacent to and directly accessible from | | one per toilet room | | one per toilet room |
| Multi-Bed | one per four patients | | one per four patients | | one per eight patients |
| Long-term | one per four patients | | one per four patients | | one per 15 patients |
| **Jails and reformatories**<br>Cell<br>Exercise room | one per cell<br>one per exercise room | | one per cell<br>one per exercise room | | |
| **Other institutions** (on each occupied floor) | one per 25 | one per 25 | one per two water closets | | one per eight |
| **Group LC** | For Group LC Occupancies, the minimum number of plumbing fixtures is specified in Section 419. | | | | |
| For the occupancies listed below, use 200 square feet (18.58 m²) per occupant for the minimum number of plumbing fixtures. | | | | | |
| **Group M**<br>Retail or wholesale stores | 1:1-50<br>2:51-100<br>3:101-400<br>Over 400, add one fixture for each additional 300 males or 150 females. | 1:1-50<br>2:51-100<br>3:101-200<br>4:201-300<br>5:301-400 | one per two water closets | | |

## TABLE 2902.1 – MINIMUM PLUMBING FIXTURES [1,2,4,6]
**(Continued)**

| TYPE OF BUILDING OR OCCUPANCY[8] | WATER CLOSETS (fixtures per person) MALE[3] | WATER CLOSETS (fixtures per person) FEMALE | LAVATORIES[5] (fixtures per person) MALE | LAVATORIES[5] (fixtures per person) FEMALE | BATHTUB OR SHOWER (fixtures per person) |
|---|---|---|---|---|---|
| For Group R Occupancies containing dwelling units or guest rooms, use the table below. For dormitories, use 200 square feet (18.58 m²) per occupant for the minimum number of plumbing fixtures. | | | | | |
| **Group R**<br>Dwelling units<br>Hotel, Motel, and Boarding house guest rooms | one per dwelling unit<br>one per guest room | | one per dwelling unit<br>one per guest room | | one per dwelling unit<br>one per guest room |
| Dormitories | one per 10<br>Over 10, add one fixture for each additional 25 males and over 8, add one for each additional 20 females. | one per 8 | one per 12<br>over 12, add one fixture for each additional 20 males and one for each additional 15 females. | one per 12 | one per eight<br>For females, add one additional unit per each additional 30. Over 150 persons, add one additional unit per each additional 20 persons. |
| For the occupancies listed below, use 5,000 square feet (464.5 m²) per occupant for the minimum number of plumbing fixtures. | | | | | |
| **Group S**<br>Warehouses | 1:1-10<br>2:11-25<br>3:26-50<br>4:51-75<br>5:76-100<br>Over 100, add one for each 30 persons. | 1:1-10<br>2:11-25<br>3:26-50<br>4:51-75<br>5:76-100 | One per 40 occupants of each sex. | | one shower for each 15 persons exposed to excessive heat or to skin contamination with poisonous, infectious or irritating materials. |

[1]The figures shown are based on one fixture being the minimum required for the number of persons indicated or any fraction thereof.

[2]For occupancies not shown, see Section 2902.1.1.

[3]Where urinals are provided, one water closet less than the number specified may be provided for each urinal installed, except the number of water closets in such cases shall not be reduced to less than one quarter (25%) of the minimum specified. For men's facilities serving 26 or more persons, not less than one urinal shall be provided.

[4]For drinking fountains, see Section 2903.4.

[5]Twenty-four inches (610 mm) of wash sink or 18 inches (457 mm) of a circular basin, when provided with water outlets for such space, shall be considered equivalent to one lavatory.

[6]For when a facility may be usable by either sex, see Section 2902.3.1.

[7]See WAC 246-320 for definitions, other fixtures and equipment for hospitals.

[8]When a space is accessory to or included as a part of a different occupancy group per Chapter 3, the area per occupant for the minimum plumbing fixture number is to be determined by its own specific use or purpose, not by that of the building's occupancy group.

**SECTION 3001—GENERAL**, is not adopted.

Elevators and Conveying Systems are regulated by Chapter 296-96 WAC.

**3002.5 Emergency doors,** is not adopted.

**3003.2 Fire-fighters' emergency operation**, is not adopted.

**(Insert Facing Page 551)**

**3004.5 Plumbing and mechanical systems**, is not adopted.

**SECTION 3005—CONVEYING SYSTEMS**, is not adopted.

**3004.3 Area of vents.** Except as provided for in Section 3004.3.1, the area of the vents shall not be less than 3½ percent of the area of the hoistway not less than 3 square feet (0.28 m²) for each elevator car, and not less than 3½ percent nor less than 0.5 square foot (0.047 m²) for each dumbwaiter car in the hoistway, whichever is greater. Vents shall be capable only of manual operation or controlled by a manual switch mounted in an approved location.

**(Insert Facing Page 552)**

**3006.3 Pressurization**, is not adopted.

**3006.5 Shunt trip**, is not adopted.

**3006.6 Plumbing systems**, is not adopted.

**(Insert Facing Page 553)**

**3408.1 Conformance.** Buildings or structures moved into or within the jurisdiction shall comply with the provisions of this code, the International Residential Code (WAC 51-51), the International Mechanical Code (WAC 51-52), the International Fire Code (WAC 51-54), the Uniform Plumbing Code and Standards (WAC 51-56 and 51-57), the Washington State Energy Code (WAC 51-11) and the Washington State Ventilation and Indoor Air Quality Code (WAC 51-13) for new buildings or structures.

**Exception:** Group R-3 buildings or structures are not required to comply if:

1. The original occupancy classification is not changed, and
2. The original building is not substantially remodeled or rehabilitated.

For the purposes of this section a building shall be considered to be substantially remodeled when the costs of remodeling exceed 60 percent of the value of the building exclusive of the costs relating to preparation, construction, demolition or renovation of foundations.

**(Insert Facing Page 568)**

**3409.5 Alterations.** A building, facility or element that is altered shall comply with the applicable provisions in Chapter 11 and ICC A117.1 unless technically infeasible. Where compliance with the section is technically infeasible, the alteration shall provide access to the maximum extent technically feasible. Where alterations would increase the number of public pay telephones to four, with at least one in the interior, or where the facility has four or more public pay telephones and one or more is altered; at least one interior text telephone shall be provided.

**Exceptions:**

1. The altered element or space is not required to be on an accessible route, unless required by Section 3409.6.
2. Accessible means of egress required by Chapter 10 are not required to be provided in existing buildings and facilities.
3. In alterations, accessibility to raised or sunken dining areas, or to all parts of outdoor seating areas is not required provided that the same services and amenities are provided in an accessible space usable by the general public and not restricted to use by people with disabilities.

**3409.6 Alterations affecting an area containing a primary function.** Where an alteration affects the accessibility to, or contains an area of primary function, the route to the primary function area shall be accessible. The accessible route to the primary function area shall include toilet facilities, telephones or drinking fountains serving the area of primary function.

**Exceptions:**

1. The costs of providing the accessible route are not required to exceed 20 percent of the costs of the alteration affecting the area of primary function.
2. This provision does not apply to alterations limited solely to windows, hardware, operating controls, electrical outlets and signs.
3. This provision does not apply to alterations limited solely to mechanical systems, electrical systems, installation or alteration of fire protection systems and abatement of hazardous materials.
4. This provision does not apply to alterations undertaken for the primary purpose of increasing the accessibility of an existing building, facility or element.

**3409.7 Scoping for alterations.** The provisions of Sections 3409.7.1 through 3409.7.11 shall apply to alterations to existing buildings and facilities. Where an escalator or new stairway is planned or installed requiring major structural changes, then a means of vertical transportation (e.g. elevator, platform lift) shall be provided in accordance with this chapter.

**3409.7.2 Elevators.** Altered elements of existing elevators shall comply with ASME A17.1 and ICC A117.1. Such elements shall also be altered in elevators programmed to respond to the same hall call control as the altered elevator. Elevators shall comply with Chapter 296-96 WAC.

**3409.7.3 Platform lifts**. Platform (wheelchair) lifts complying with ICC A117.1 and installed in accordance with ASME A18.1 shall be permitted as a component of an accessible route. Platform lifts shall comply with Chapter 296-96 WAC.

**3409.7.7 Dwelling or sleeping units.** Where I-1, I-2, I-3, R-1, R-2 or R-4 dwelling or sleeping units are being altered or added, the requirements of Section 1107 for Accessible or Type A units and Chapter 9 for accessible alarms apply only to the quantity of spaces being altered or added. At least one sleeping room for each 25 sleeping rooms, or fraction thereof, being added or altered, shall have telephones and visible notification devices complying with Section E104.3.4, as well as visible alarms.

**3409.7.9 Toilet rooms**. Where it is technically infeasible to alter existing toilet and bathing facilities to be accessible, an accessible unisex toilet or bathing facility is permitted. The unisex facility shall be located on the same floor and in the same area as the existing facility. The number of toilet facilities and water closets required by the State Building Code is permitted to be reduced by one, in order to provide accessible features.

**(Insert Facing Page 569)**

**WAC 51-50-31200**

**Washington State Building Code Standard 31-2**
**STANDARD TEST METHOD FOR PARTICULATE EMISSIONS FROM FIREPLACES**

**See Section 2114, International Building Code**

***(Insert Following Page 596)***

## SECTION 31.200 — TITLE and SCOPE

### SECTION 31.200.1 TITLE

This Appendix Chapter 31-2 shall be known as the "Washington State Standard Test Method for Particulate Emissions from Fireplaces" and may be cited as such; and will be referred to herein as "this Standard".

### SECTION 31.200.2 SCOPE

This Standard covers emissions performance, approval/certification procedures, test laboratory accreditation, record keeping, reporting requirements, and the test protocol for measuring particulate emissions from fireplaces.

All testing, reporting and inspection requirements of this Standard shall be conducted by a Washington State Department of Ecology (DOE) approved testing laboratory. In order to qualify for DOE approval, the test laboratory must be a U. S. Environmental Protection Agency (EPA) accredited laboratory (40 CFR Part 60, Subpart AAA). DOE may approve a test laboratory upon submittal of the following information:

1. A copy of their U. S. EPA accreditation certificate; and

2. A description of their facilities, test equipment, and test-personnel qualifications including education and work experience.

DOE may revoke a test laboratory approval when the test laboratory is no longer accredited by the U. S. EPA or if DOE determines that the test laboratory does not adhere to the testing requirements of this Chapter.

## SECTION 31.201 — DEFINITIONS

For the purpose of this Standard certain terms are defined as follows:

**ANALYZER CALIBRATION ERROR** is the difference between the gas concentration exhibited by the gas analyzer and the known concentration of the calibration gas when the calibration gas is introduced directly to the analyzer.

**BURN RATE** is the average rate at which test-fuel is consumed in a fireplace measured in kilograms of wood (dry basis) per hour (kg/hr) during a test-burn.

**CALIBRATION DRIFT** is the difference in the analyzer reading from the initial calibration response at a mid-range calibration value after a stated period of operation during which no unscheduled maintenance, repair, or adjustment took place.

**CALIBRATION GAS** is a known concentration of Carbon Dioxide ($CO_2$), Carbon Monoxide (CO), or Oxygen ($O_2$) in Nitrogen ($N_2$).

**CERTIFICATION or AUDIT TEST** is the completion of at least one, three-fuel-load test-burn cycle in accordance with Section 31.202.

**FIREBOX** is the chamber in the fireplace in which a test-fuel charge(s) is placed and combusted.

**FIREPLACE** is a wood burning device which is exempt from U. S. EPA 40 CFR Part 60, Subpart AAA and:

1. is not a cookstove, boiler, furnace, or pellet stove as defined in 40 CFR Part 60, Subpart AAA, and

2. is not a masonry heater as defined in Section 31.201.

**FIREPLACE, CERTIFIED**, is a fireplace that meets the emission performance standards when tested according to Washington State Building Code Standard 31-2.

**FIREPLACE, NON-CERTIFIED**, (masonry or concrete) is any fireplace that is not a certified fireplace. A non-certified fireplace will be subject to applicable burn ban restrictions.

**FIREPLACE DESIGN** is the construction and/or fabrication specifications including all dimensions and materials required for manufacturing or building fireplaces with identical combustion function and particulate emissions factors.

**FIREPLACE MODEL LINE** is a series of fireplace models which all have the same internal assembly. Each model in a model line may have different facade designs and external decorative features.

**INTERNAL ASSEMBLY** is the core construction and firebox design which produces the same function and emissions factor for a fireplace model line.

**(Insert as Page 596a)**

**MASONRY HEATER** is a heating system of predominantly masonry construction having a mass of at least 800 kg (1760 lbs), excluding the chimney and foundation, which is designed to absorb a substantial portion of the heat energy from a rapidly-burned charge of solid fuel by:

a) routing of exhaust gases through internal heat exchange channels in which the flow path downstream of the firebox includes at least one 180 degree change in flow direction, usually downward, before entering the chimney, and

b) being constructed of sufficient mass such that under normal operating conditions the external surface of the heater, except in the region immediately surrounding the fuel loading door(s), does not exceed 110°C (230°F).

Masonry heaters shall be listed or installed in accordance with ASTME-1602.

**RESPONSE TIME** is the amount of time required for the measurement system to display 95 percent of a step change in gas concentration.

**SAMPLING SYSTEM BIAS** is the difference between the gas concentrations exhibited by the analyzer when a known concentration gas is introduced at the outlet of the sampling probe and when the sample gas is introduced directly to the analyzer.

**SPAN** is the upper limit of the gas concentration measurement range (25 percent for $CO_2$, $O_2$, and 5 percent for CO).

**TEST FACILITY** is the area in which the fireplace is installed, operated, and sampled for emissions.

**TEST FUEL LOADING DENSITY** is the weight of the as-fired test-fuel charge per unit area of usable firebox floor (or hearth).

**TEST-BURN** is an individual emission test which encompasses the time required to consume the mass of three consecutively burned test-fuel charges.

**TEST-FUEL CHARGE** is the collection of test fuel pieces placed in the fireplace at the start of certification test.

**USABLE FIREBOX AREA** is the floor (or hearth) area, within the fire chamber of a fireplace upon which a fire may be, or is intended to be built. Usable firebox area is calculated using the following definitions:

1. Length. The longest horizontal fire chamber dimension along the floor of the firebox that is parallel to a wall of the fire chamber.

2. Width. The shortest horizontal fire chamber dimension along the floor of the firebox that is parallel to a wall of the fire chamber.

3. For angled or curved firebox walls and/or sides, the effective usable firebox area shall be determined by calculating the sum of standard geometric areas or sub-areas of the firebox floor.

If a fireplace has a floor area within the fire chamber which is larger than the area upon which it is intended that fuel be placed and burned, the usable firebox area shall be calculated as the sum of standard geometric areas or sub-areas of the area intended for fuel placement and burning. For fireplace grates which elevate the fuel above the firebox floor, usable firebox area determined in this manner shall be multiplied by a factor of 1.5. The weight of test-fuel charges for fireplace-grate usable-firebox-area tests, shall not exceed the weight of test-fuel charges determined for the entire fireplace floor area.

**ZERO DRIFT** is the difference in the analyzer reading from the initial calibration response at the zero concentration level after a stated period of operation during which no unscheduled maintenance, repair, or adjustment took place.

## SECTION 31.202 — TESTING

**31.202.1 Applicability**. This method is applicable for the certification and auditing of fireplace particulate emission factors. This method describes the test facility, fireplace installation requirements, test-fuel charges, and fireplace operation as well as procedures for determining burn rates and particulate emission factors.

**31.202.2 Principle**. Particulate matter emissions are measured from a fireplace burning prepared test-fuel charges in a test facility maintained at a set of prescribed conditions.

**31.202.3 Test Apparatus**.

**31.202.3.1 Fireplace Temperature Monitors**. Devices capable of measuring flue-gas temperature to within 1.5 percent of expected absolute temperatures.

**31.202.3.2 Test Facility Temperature Monitor**. A thermocouple located centrally in a vertically oriented pipe shield 6 inches (150 mm) long, 2 inches (50 mm) diameter that is open at both ends, capable of measuring air temperature to within 1.5 percent of expected absolute temperatures.

**31.202.3.3 Balance**. Balance capable of weighing the test-fuel charge(s) to within 0.1 lb (0.05 kg).

**31.202.3.4 Moisture Meter**. Calibrated electrical resistance meter for measuring test-fuel moisture to within 1 percent moisture content (dry basis).

**31.202.3.5 Anemometer**. Device capable of detecting air velocities less than 20 ft/min (0.10 m/sec), for measuring air velocities near the fireplace being tested.

**31.202.3.6 Barometer**. Mercury, aneroid or other barometer capable of measuring atmospheric pressure to within 0.1 inch Hg (2.5 mm Hg).

**31.202.3.7 Draft Gauge**. Electromanometer or other device for the determination of flue draft (i.e., static pressure) readable to within 0.002 inches of water column (0.50 Pa).

**31.202.3.8 Combustion Gas Analyzer**. Combustion gas analyzers for measuring Carbon Dioxide ($CO_2$), Carbon Monoxide (CO), and Oxygen ($O_2$) in the fireplace exhaust-gas stream must meet all of the following measurement system performance specifications:

1. **Analyzer Calibration Error**. Shall be less than ± 2 percent of the span value for the zero, mid-range, and high-range calibration gases.

2. **Sampling System Bias**. Shall be less than ± 5 percent of the span value for the zero, mid-range, and high-range calibration gases.

3. **Zero Drift**. Shall be less than ± 3 percent of the span over the period of each run.

4. **Calibration Drift**. Shall be less than ± 3 percent of the span value over the period of each run.

5. **Response Time**. Shall be less than 1.5 minutes.

**31.202.4 Emissions Sampling Method**. Use the emission sampler system (ESS) as described in Section 31.203.12 or an equivalent method as determined by the application of the U. S. EPA Method 301 Validation Procedure (Federal Register, December 12, 1992, Volume 57, Number 250, page 11998) and upon approval of DOE.

**31.202.5 Fireplace Installation and Test Facility Requirements**. The fireplace being tested must be constructed, if site-built, or installed, if manufactured, in accordance with the designer's / manufacturer's written instructions. The chimney shall have a total vertical height above the base of the fire chamber of not less than 15 feet (4 600 mm). The fireplace chimney exit to the atmosphere must be freely communicating with the fireplace combustion makeup-air source. There shall be no artificial atmospheric pressure differential imposed between the chimney exit to the atmosphere and the fireplace makeup-air inlet.

**31.202.6 Fireplace Aging and Curing**. A fireplace of any type shall be aged before certification testing begins. The aging procedure shall be conducted and documented by the testing laboratory.

**31.202.6.1 Catalyst-Equipped Fireplaces**. Operate the catalyst-equipped fireplace using fuel described in Section 31.203. Operate the fireplace with a new catalytic combustor in place and in operation for at least 50 hours. Record and report hourly catalyst exit temperatures, the hours of operation, and the weight of all fuel used.

**31.202.6.2 Non-Catalyst-Equipped Fireplaces**. Operate the fireplace using the fuel described in Section 31.203 for at least 10 hours. Record and report the hours of operation and weight of all fuel used.

**31.202.7 Pretest Preparation**. Record the test-fuel charge dimensions, moisture content, weights, and fireplace (and catalyst if equipped) descriptions.

The fireplace description shall include photographs showing all externally observable features and drawings showing all internal and external dimensions needed for fabrication and/or construction. The drawings must be verified as representing the fireplace being tested and signed by an authorized representative of the testing laboratory.

**31.202.8 Test Facility Conditions**. Locate the test facility temperature monitor on the horizontal plane that includes the primary air intake opening for the fireplace. Locate the temperature monitor 3 to 6 feet (1 000 to 2 000 mm) from the front of the fireplace in the 90° sector in front of the fireplace. Test facility temperatures shall be maintained between 65° and 90°F (18° and 32°C). Use an anemometer to measure the air velocity. Measure and record the room-air velocity within 2 feet (600 mm) of the test fireplace before test initiation and once immediately following the test-burn completion. Air velocity shall be less than 50 feet/minute (250 mm/second) without the fireplace operating.

## SECTION 31.203 — TEST PROTOCOL

**31.203.1 Test Fuel**. Fuel shall be air dried Douglas fir dimensional lumber or cordwood without naturally associated bark. Fuel pieces shall not be less than 1/2 nor more than 5/6 of the length of the average fire chamber width. Fuel shall be split or cut into pieces with no crossectional dimension greater than 6 inches (152 mm). Spacers, if used, shall not exceed 3/4 inches (19 mm) in thickness and 15 percent of the test-fuel charge weight. Fuel moisture shall be in the range of 16 to 20 percent (wet basis) or 19 to 25 percent (dry basis) meter reading.

**31.203.2 Test-Fuel Loading Density**. The wet (with moisture) minimum weight of each test-fuel charge shall be calculated by multiplying the hearth area in square feet by 7.0 pounds per square foot (square meters x 0.30 kg/$m^2$) (± 10 percent). Three test-fuel charges shall be prepared for each test-burn.

**31.203.3 Kindling**. The initial test-fuel charge of the three test-fuel charge test-burn shall be started by using a kindling-fuel charge which is up to 50 percent of the first test-fuel charge weight. Kindling-fuel pieces can be any size needed to start the fire or whatever is recommended in the manufacturer's (builder's) instructions to consumers. The kindling-fuel charge weight is not part of the initial test-fuel charge weight but is in addition to it.

**(Insert as Page 596c)**

**31.203.4 Test-Burn Ignition**. The fire can be started with or without paper. If used, the weight of the paper must be included in test-fuel charge weight. The remainder of the test-fuel charge may be added at any time after kindling ignition except that the entire first test-fuel charge must be added within 10 minutes after the start of the test (i.e., the time at which the flue-gas temperature at the 8-foot (2 440 mm) level is over 25°F (14°C) greater than the ambient temperature of the test facility).

**31.203.5 Test Initiation**. Emissions and flue-gas sampling are initiated immediately after the kindling has been ignited and when flue-gas temperatures in the center of the flue at an elevation of 8 feet (2 440 mm) above the base (floor) of the fire chamber reach 25°F (14°C) greater than the ambient temperature of the test facility.

**31.203.6 Sampling Parameters**. Sampling (from the 8-foot [2 440 mm] flue-gas temperature measurement location) must include:

1. Particulate Emissions
2. Carbon Dioxide ($CO_2$) [1]
3. Carbon Monoxide (CO) [1]
4. Oxygen ($O_2$) [1]
5. Temperature(s)

[1] These gases shall be measured on-line (real-time) and recorded at a frequency of not less than once every 5 minutes. These 5-minute readings are to be arithmetically averaged over the test-burn series or alternatively, a gas bag sample can be taken at a constant sample rate over the entire test-burn series and analyzed for the required gases within one hour of the end of the test-burn.

If a fireplace is equipped with an emissions control device which is located downstream from the 8-foot (2 440 mm) flue-gas temperature measurement location, a second temperature, particulate, and gaseous emissions sampling location must be located downstream from the emissions control device but not less than 4 flue diameters upstream from the flue exit to the atmosphere. The two sampling locations must be sampled simultaneously during testing for each fireplace configuration being tested.

**31.203.7 Test-Fuel Additions and Test Completion**. The second and third test-fuel charges for a test-burn may be placed and burned in the fire chamber at any time deemed reasonable by the operator or when recommended by the manufacturer's and/or builder's instructions to consumers.

No additional kindling may be added after the start of a test-burn series and the flue-gas temperature at the 8-foot (2 440 mm) level above the base of the hearth must always be 25°F (14°C) greater than the ambient temperature of the test facility for a valid test-burn series. Each entire test-fuel charge must be added within 10 minutes from the addition of the first piece.

A test (i.e., a three test-fuel charge test-burn series) is completed and all sampling and measurements are stopped when all three test-fuel charges have been consumed (to more than 90 percent by weight) in the firebox and the 8-foot (2 440 mm) level flue-gas temperature drops below 25°F (14°C) greater than the ambient temperature of the test facility. Within 5 minutes after the test-burn is completed and all measurements and sampling has stopped, the remaining coals and/or unburned fuel, shall be extinguished with a carbon dioxide fire extinguisher. All of the remaining coals, unburned fuel, and ash shall be removed from the firebox and weighed to the nearest 0.1 pound (0.05 kg). The weight of these unburned materials and ash shall be subtracted from the total test-burn fuel weight when calculating the test-burn burn rate. A test-burn is invalid if less than 90 percent of the weight of the total test-fuel charges plus the kindling weight have been consumed in the fireplace firebox.

**31.203.8 Test-Fuel Charge (Load) Adjustments**. Test-fuel charges may be adjusted (i.e., repositioned) once during the burning of each test-fuel charge. The time used to make this adjustment shall be less than 15 seconds.

**31.203.9 Air Supply Adjustment**. Air supply controls, if the fireplace is equipped with controls, may not be adjusted during any test-burn series after the first 10 minutes of startup of each fuel load. All air supply settings must be set to the lowest level at the start of a test and shall remain at the lowest setting throughout a test-burn.

**31.203.10 Auxiliary Fireplace Equipment Operation**. Heat exchange blowers (standard or optional) sold with the fireplace shall be operated during all test-burns following the manufacturer's written instructions. If no manufacturer's written instructions are available, operate the heat exchange blower in the "high" position. (Automatically operated blowers shall be operated as designed.) Shaker grates, by-pass controls, afterburners, or other auxiliary equipment may be adjusted only once per test-fuel charge following the manufacturer's written instructions. Record and report all adjustments on a fireplace operational written-record.

**31.203.11 Fireplace Configurations**. One, 3 test-fuel charge test-burn shall be conducted for each of the following fireplace operating configurations:

1. Door(s) closed, with hearth grate;
2. Door(s) open, with hearth grate;
3. Door(s) closed, without hearth grate;
4. Door(s) open, without hearth grate; and
5. With no door(s), and draft inducer on.

No test-burn series is necessary for any configuration the appliance design cannot or is not intended to accommodate. If a configuration is not tested, the reason must be submitted with the test report and the appliance label must state that the appliance cannot be used in that configuration by consumer users.

One emission factor result, or one emission factor average, as provided in paragraph 31.203.11.2, from each fireplace configuration tested shall be compiled into an arithmetic average of all the configurations tested for determining compliance with the requirements of paragraph 31.204.2.

**31.203.11.1 Closed-Door(s) Testing**. For all closed-door test configurations, the door(s) must be closed within 10 minutes from the addition of the first test-fuel piece of each test-fuel charge in a test-burn. During a test-burn, the door(s) cannot be re-opened except during test-fuel reload and adjustment as referenced in Sections 31.203.7 and 31.203.8.

**31.203.11.2 Additional Test-Burn**. The testing laboratory may conduct more than one test-burn series for each of the applicable configurations specified in Section 31.203.11. If more than one test-burn is conducted for a specified configuration, the results from at least 2/3 of the test-burns for that configuration shall be used in calculating the arithmetic average emission factor for that configuration. The measurement data and results of all tests conducted shall be reported regardless of which values are used in calculating the average emission factor for that configuration.

**31.203.12 Emissions Sampling System (ESS)**.

**31.203.12.1 Principle**. Figure 31-2-1 shows a schematic of an ESS for sampling solid-fuel-fired fireplace emissions. Except as specified in Section 31.202.4, an ESS in this configuration shall be used to sample all fireplace emissions. The ESS shall draw flue gases through a 15 inch (380 mm) long, 3/8 inch (10 mm) O.D. stainless steel probe which samples from the center of the flue at an elevation which is 8 feet (2 440 mm) above the floor of the firebox (i.e., the hearth). A flue-gas sample shall then travel through a 3/8 inch (10 mm) O.D. Teflon® tube, and a heated U. S. EPA Method 5-type glass-fiber filter (40 CFR Part 60, Appendix A) for collection of particulate matter. The filter shall be followed by an in-line flow-through cartridge containing 20 grams of XAD-2 sorbent resin for collecting semi-volatile hydrocarbons. Water vapor shall then be removed from the sampled gas by a silica-gel trap. Flue-gas oxygen concentrations, which shall be used to determine the ratio of flue-gas volume to the amount of fuel burned, are measured within the ESS system by an electrochemical cell meeting the performance specifications presented in Section 31.202.3.8 (1).

The ESS shall use a critical orifice to maintain a nominal flue-gas sampling rate of 0.035 cfm (0.0167 liters per second). The actual flow rate through each critical orifice shall be determined to within 0.000354 cubic feet (0.01 liters) per second before and after each test-burn with a bubble flow meter to document exact sampling rates. The post-test-burn critical-orifice flow-rate determinations shall be performed before the ESS is dismantled for sample recovery and clean-up. Pre-test-burn and post-test-burn critical-orifice flow-rate measurements shall be within 0.0000117 cubic feet (0.00033 liters) per second of each other or the test-burn emissions results shall be invalid. Temperatures shall be monitored using type K ground-isolated, stainless-steel-sheathed thermocouples.

The ESS unit shall return particle-free and dry exhaust gas to the flue via a 1/4 inch (6 mm) Teflon® line and a 15 inch (380 mm) stainless steel probe inserted into the flue. A subsample aliquot of the flue-gas sample-gas stream exiting the ESS unit, shall be pumped into a 1 cubic foot (29 liter) Tedlar® bag for measuring the average carbon dioxide, carbon monoxide, and confirmation of average oxygen concentrations for the test period. Flow to the subsample gas bag shall be controlled by a solenoid valve connected to the main pump circuit and a fine-adjust needle-controlled flow valve. The solenoid valve shall be open only when the pump is activated, allowing the subsample gas to be pumped into the gas bag at all times when the ESS pump is on. The rate of flow into the bag shall be controlled by the fine-adjust metering needle-valve which is adjusted at setup so that 4.7 to 5.2 gal (18 to 20 liters) of gas is collected over the entire 3 test-fuel charge test-burn without over-pressurizing the gas sample bag.

**31.203.12.2 The Data Acquisition and Control System**. The data acquisition and control system for the ESS is shown in Figure 31-2-2. This system consists of a personal computer (PC) containing an analog-to-digital data processing board (12-bit precision), a terminal (connection) box, and specialized data acquisition and system control software (called CONLOG).

For fireplace testing, the CONLOG software is configured to control, collect, and store the following data:

1. Test-period starting and ending times and dates, and total length of sampling period,

2. Pump-cycle on/off, cycle length and thermocouple (TC) cycle recording interval (frequency),

3. Temperature records, including flue-gas and ambient temperatures, averaged over pre-selected intervals,

4. Date, times, and weights of each added fuel load, and

**(Insert as Page 596e)**

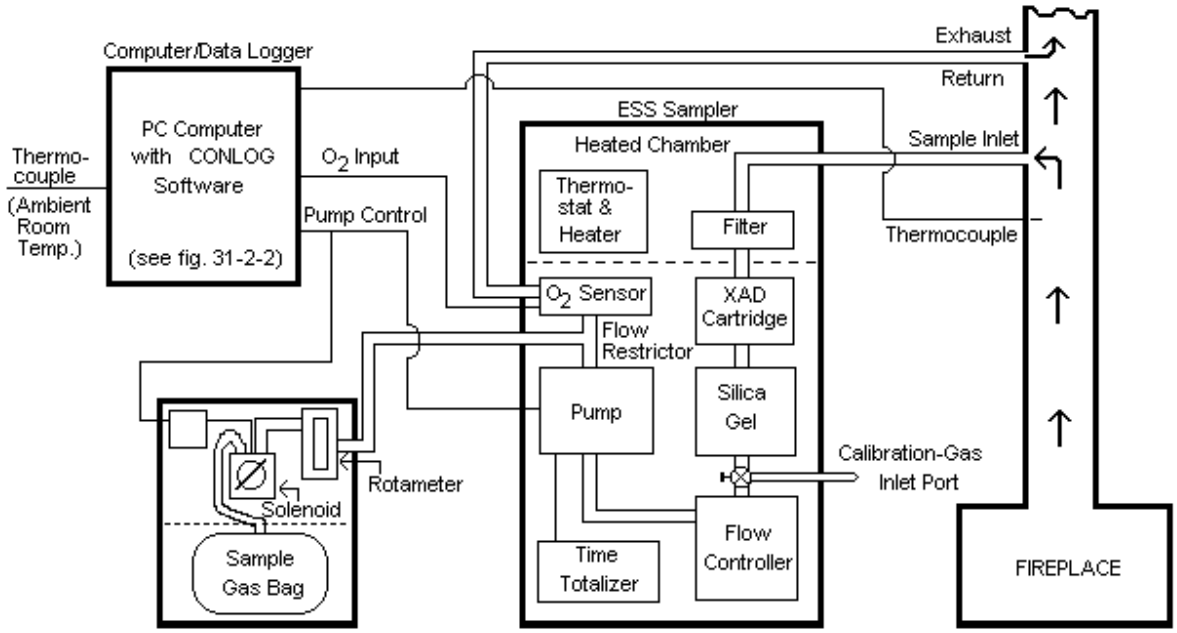


**Figure 31-2-1. Schematic of ESS/Data Logger system.**

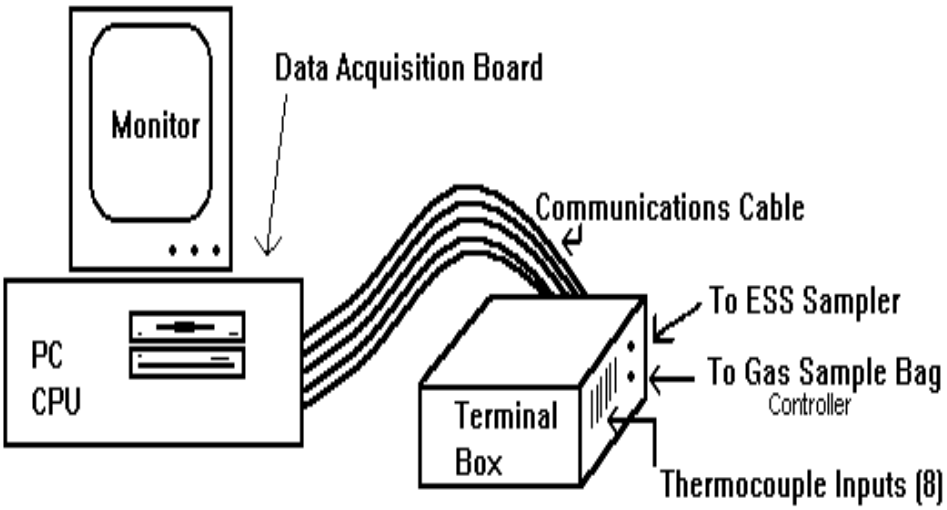


Figure 31-2-2. ESS data logger system.

**(Insert as Page 596f)**

5. Flue-gas oxygen measurements taken during each sample cycle.

During testing, instantaneous readings of real-time data shall be displayed on the system status screen. These data shall include the date, time, temperatures for each of the TCs, and flue-gas oxygen concentrations. The most recent 15 sets of recorded data shall also be displayed.

Flue-gas sampling and the recording of flue-gas oxygen concentrations shall only occur when flue-gas temperatures are above 25°F (14°C) greater than the ambient temperature of the test facility. Temperatures and fueling shall always be recorded at five-minute intervals regardless of flue-gas temperature. The ESS sampling-pump operating cycle shall be adjustable as described in Section 31.203.12.3.

**31.203.12.3 ESS Sampling-Pump Operating Cycle**. The ESS sampling-pump operating cycle shall be adjusted to accommodate variable test-fuel charge sizes, emission factors, and the length of time needed to complete a test-burn series. The sampler-pump operation shall be adjustable from 1 second to 5 minutes (100 percent) "on" for every 5-minute test-burn data-recording interval. This will allow adjustment for the amount of anticipated emissions materials that will be sampled and deposited on the ESS filter, XAD-2, and the other system components. It is recommended that the minimum sample quantities stipulated in Section 31.203.12.4 be used to calculate the appropriate pump cycle "on" and "off" periods. It should be noted that if the sampler collects too much particulate material on the filter and in the XAD-2 cartridge, the unit may fail the sample flow calibration check required at the end of each test-burn.

**31.203.12.4 Minimum Sample Quantities**. For each complete 3 test-fuel charge test-burn, the ESS must catch a minimum total particulate material mass of at least 0.231 grains (15 mg). Alternatively, the ESS must sample a minimum of 10 cubic feet (283 liters) during each 3 test-fuel charge test-burn. If this volume cannot be sampled in the test-burn time period, two ESS samplers must be utilized to sample fireplace emissions simultaneously during each test-burn. If emissions results from the two ESSs are different by more than 10 percent of the lower emissions-factor result, the test-burn results are invalid. An arithmetic average is calculated for test-burn results when two ESSs are utilized.

**31.203.12.5 Equipment Preparation and Sample Processing Procedures**.

**31.203.12.5.1.** Prior to emissions testing, the ESS unit shall be prepared with a new, tared glass-fiber filter and a clean XAD-2 sorbent-resin cartridge. Within 3 hours after testing is completed, the stainless steel sampling probe, Teflon® sampling line, filter holder, and XAD-2 cartridge(s) shall be removed from the test site and transported to the laboratory for processing. Each component of the ESS sampler shall be processed as follows:

1. Filter: The glass fiber filter (4 inches (102 mm) in diameter) shall be removed from the ESS filter housing and placed in a petri dish for desiccation and gravimetric analysis.

2. XAD-2 sorbent-resin cartridge: The sorbent-resin cartridge shall be extracted in a Soxhlet extractor with dichloromethane for 24 hours. The extraction solution shall be transferred to a tared glass beaker and evaporated in an ambient-air dryer. The beaker with dried residue shall then be desiccated to constant weight (less than ± 0.5 mg change within a 2-hour period), and the extractable residue shall be weighed.

3. ESS hardware: All hardware components which are in the flue-gas sample stream (stainless steel probe, Teflon® sampling line, stainless steel filter housing, and all other Teflon® and stainless steel fittings) through the top of the sorbent-resin cartridge, shall be cleaned with a solvent mixture of 50 percent dichloromethane and 50 percent methanol. The cleaning solvent solutions shall be placed in tared glass beakers, evaporated in an ambient-air dryer, desiccated to constant weight (less than ± 0.5 mg change within a 2-hour period), and weighed.

EPA Method 5H procedures (40 CFR Part 60, Appendix A) for desiccation and weighing time intervals shall be followed for steps 1 through 3 above.

**31.203.12.5.2** The ESS shall be serviced both at the start and end of a fireplace testing period. During installation, leak checks shall be performed; the thermocouples, fuel-weighing scale, and oxygen-cell shall be calibrated, and the data logger shall be programmed. At the end of the test period, final calibration, and leak-check procedures shall again be performed, and the ESS sampling line, filter housing, XAD-2 cartridge, sampling probe, and Tedlar® bag shall be removed, sealed, and transported to the laboratory for analysis. If the pre-test and post-test leak checks of the ESS system exceed 0.00033 liters per second, the test-burn emission results shall be invalid.

**31.203.12.6 Data Processing and Quality Assurance**.

**31.203.12.6.1** Upon returning to the laboratory facilities, the data file (computer disk) shall be reviewed to check for proper equipment operation. The data-logger data files, log books, and records maintained by field staff shall be reviewed to ensure sample integrity.

The computer-logged data file shall be used in conjunction with the ESS particulate samples and sample-

**(Insert as Page 596g)**

gas bag analyses to calculate the emission factor, emission rate, and fireplace operational parameters. An example ESS results report is presented in Table 31-2-A.

**31.203.12.6.2 Burning Period**. The total burning period is calculated by:

Total Burning Period = (Length of each sample cycle) x (Number of flue temperature readings over 25°F (14°C) greater than the ambient temperature of the test facility).

**WHERE:**

1. Length of each sample cycle: The time between each temperature recording as configured in the CONLOG software settings (standardized at 5 minutes).

2. Number of flue temperature readings during fireplace use: The total number of temperature readings when the calibrated temperature value was more than 25°F (14°C) greater than the ambient temperature of the test facility.

**31.203.12.6.3 Particulate Emissions**.

**31.203.12.6.3.1 ESS Particulate Emission Factor**. The equation for the total ESS particulate emission factor for each test-burn presented below produces reporting units of grams per dry kilogram of fuel burned (g/kg):

Particulate emission factor (g/kg) =

$$\frac{(\text{Particulate Catch}) \times (\text{Stoichiometric Volume}) \times (\text{Flue-gas Dilution Factor})}{(\text{Sampling Time}) \times (\text{Sampling Rate})}$$

**WHERE:**

1. Particulate Catch: The total mass, in grams, of particulate material caught on the filter, in the XAD-2 resin cartridge (semi-volatile compounds); and in the probe clean-up and rinse solutions.

2. Stoichiometric Volume: Stoichiometric volume is the volume of dry air needed to completely combust one dry kilogram of fuel with no "excess air". This value is determined by using a chemical reaction balance between the specific fuel being used and the chemical components of air. The stoichiometric volume for Douglas fir is 86.78 cubic feet per pound (5 404 liters per dry kilogram) at 68°F (20°C) and 29.92 inches (760 mm) of mercury pressure.

3. Flue-gas Dilution Factor: The degree to which the sampled combustion gases have been diluted in the flue by air in excess of the stoichiometric volume (called excess air). The dilution factor is obtained by using the average sampled carbon dioxide and carbon monoxide values obtained from the sample gas bag analyses and the following equation:

Flue-Gas Dilution Factor =

$$18.53 + \left( \frac{\varphi}{\lambda} 1 - \frac{\varphi}{\lambda} \frac{CO_2 + \frac{1}{2} CO}{18.53} \frac{\kappa}{\mu} \frac{\kappa}{\mu} \times 2.37 \right)$$

$$(CO_2 + \tfrac{1}{2} CO)$$

Note: Multiplying the g/kg emission factor by the burn rate (dry kg/hr) yields particulate emissions in grams per hour (g/hr). Burn rate is calculated by the following equation:

$$\text{Burn Rate (kg/hr)} = \frac{\text{Total Fuel (kg)}}{\text{Total Burn Period (hours)}}$$

**WHERE:**

Total Fuel is the total fuel added during the entire test-burn minus the remaining unburned materials at the end of the test burn.

**4. Sampling Time: The number of minutes the sampler pump operated during the total test-burn period.**

5. Sampling Rate: Sampling rate is controlled by the critical orifice installed in the sampler. The actual calibrated sampling rate is used here.

**31.203.12.6.3.2 EPA Method 5H Particulate Emissions**. ESS-measured emissions factors submitted to DOE for approval must first be converted to U. S. EPA Method 5H equivalents. The ESS particulate emissions factor results obtained in Section 31.203.12.6.1 are converted to be equivalent to the U. S. EPA Method 5H emissions factor results by the following equation:

$$1.254 + ( 0.302 \times PEF ) + ( 1.261 \times 10^{-PEF} )$$

**WHERE:**

PEF is the ESS-measured particulate emission factor for a test burn.

**31.203.12.6.4 CO Emissions**. The carbon monoxide (CO) emission factor equation produces grams of CO per dry kilogram of fuel burned. The grams per kilogram equation includes some equation components described above.

CO emission factor (g/kg) =

$$\frac{(\text{Fraction CO}) \times (\text{Stoich. Volume}) \times (\text{Dilution Factor}) \times (\text{Molecular Weight of CO})}{(24.45\ \text{L/mole})}$$

WHERE:

1. Fraction CO: The fraction of CO measured in the gas sampling bag.

**Note**: Percent CO divided by 100 gives the fraction CO.

2. Molecular Weight of CO: The gram molecular weight of CO, 28 pounds per pound-mole (28.0 g/g-mole).

Multiplying the results of the above equation by the burn rate (dry kg/hr) yields the grams per hour (g/hr) CO emission rate.

**(Insert as Page 596h)**

**Table 31-2-A Example ESS Data Results Format**

**ESS Emission Results**

| | |
|---|---|
| Test Facility Location: | xxxx |
| Test Laboratory: | xxxx |
| Test-Burn Number: | xxxx |
| Start Time/Date: | xxxx |
| End Time/Date: | xxxx |
| Fireplace Model: | xxxx |

**TIME**

| | |
|---|---|
| Total Test Period | 152.3 hours |
| Total Burn Time | 64.6 hours |
| Flue >25 Degrees F above ambient temperature | 42.4 % |

**ESS SETTINGS**

| | |
|---|---|
| ESS Sample Rate | 1.004 l/min |
| Sample Cycle | 5.0 min |
| Sample Time / Sample Cycle | 0.443 min |

**TEST FUEL**

| | |
|---|---|
| Total Fuel Used (wet weight) | 101.3 kg |
| Ave. Fuel Moisture (dry basis) | 17.7 % |
| Total Fuel Used (dry weight) | 86.1 kg |
| Average Test-Fuel Charge | 14.5 kg |
| Average Burn Rate | 1.33 dry kg/hr |

**PARTICULATE EMISSIONS (EPA Method 5H Equivalents)**

| | |
|---|---|
| Gram / Kilogram | 2.6 g/kg |
| Gram / Hour | 3.4 g/hr |
| Gram / Cubic Meter | 0.06 g/m$^3$ |

**CARBON MONOXIDE EMISSIONS**

| | |
|---|---|
| Gram / Kilogram | 48.0 g/kg |
| Gram / Hour | 64.0 g/hr |
| Gram / Cubic Meter | 1.25 g/m$^3$ |

**AVERAGE TEMPERATURES**

| | |
|---|---|
| Fuel-Gas Temperatures | 275 °F 135 °C |
| Flue Exit Temperature | 308 °F 154 °C |
| Test Facility Ambient Temperature | 66 °F 19 °C |

**AVERAGE FLUE-GAS CONCENTRATIONS**

| | |
|---|---|
| Flue Oxygen (SE) | 18.15 % |
| Flue Oxygen (gas bag or analyzer) | 18.05 % |
| Flue CO (gas bag or analyzer) | 0.10 % |
| Flue $CO_2$ (gas bag or analyzer) | 2.60 % |

**BREAKDOWN OF ESS PARTICULATE SAMPLE**

| | |
|---|---|
| Rinse | 25.5 mg |
| XAD | 6.3 mg |
| Filter | 15.7 mg |
| Blank | 0.0 mg |
| **TOTAL** | **47.4 mg** |

Notes:
NM = Not Measured, NA = Not Applicable, NU = Not Used
Total time flue temperature greater than 25°F over ambient temperature.

TEST PERFORMED BY: XYZ Testing International, Olympia Washington, 98504

**31.203.13 Calibrations**.

**31.203.13.1 Balance**. Before each certification test, the balance used for weighing test-fuel charges shall be audited by weighing at least one calibration weight (Class F) that corresponds to 20 percent to 80 percent of the expected test-fuel charge weight. If the scale cannot reproduce the value of the calibration weight within 0.1 lb (0.05 kg) or 1 percent of the expected test-fuel charge weight, whichever is greater, re-calibrate the scale before use with at least five calibration weights spanning the operational range of the scale.

**31.203.13.2 Temperature Monitor**. Calibrate the Temperature Monitor before the first certification test and semiannually thereafter.

**31.203.13.3 Fuel Moisture Meter**. Calibrate the Fuel Moisture Meter as per the manufacturer's instructions before each certification test.

**31.203.13.4 Anemometer**. Calibrate the anemometer as specified by the manufacturer's instructions before the first certification test and semiannually thereafter.

**31.203.13.5 Barometer**. Calibrate the Barometer against a mercury barometer before the first certification test and semiannually thereafter.

**31.203.13.6 Draft Gauge**. Calibrate the Draft Gauge as per the manufacturer's instructions; a liquid manometer does not require calibration.

**31.203.13.7 ESS.** The ESS shall be calibrated as specified in Section 31.203.12.1.

**31.203.14 Reporting Criteria**. Submit both raw and reduced data for all fireplace tests. Specific reporting requirements are as follows:

**31.203.14.1 Fireplace Identification**. Report fireplace identification information including manufacturer, model, and serial number. Include a copy of fireplace installation and operation manuals.

**31.203.14.2 Test Facility Information**. Report test facility location, temperature, and air velocity information.

**31.203.14.3 Test Equipment Calibration and Audit Information**. Report calibration and audit results for the test-fuel balance, test-fuel moisture meter, analytical balance, and sampling equipment including volume metering systems and gaseous analyzers.

**31.203.14.4 Pretest Information and Conditions**. Report all pretest conditions including test-fuel charge weight, fireplace temperatures, and air supply settings.

**31.203.14.5 Particulate Emission Data**. Report a summary of test results for all test-burns conducted and the arithmetically averaged emission factor for all test-burns used for certification. Submit copies of all data sheets and other records collected during the testing. Submit examples of all calculations.

**31.203.14.6 Required Test Report Information and Suggested Format**. Test report information requirements to be provided to DOE for approval/certification of fireplaces are presented in this Standard. The requirements are presented here in a recommended report format.

**31.203.14.6.1 Introduction**.

1. Purpose of test: certification or audit.

2. Fireplace identification: manufacturer, model number, catalytic/non-catalytic, and options. Include a copy of fireplace installation and operation manuals.

3. Laboratory: name, location, and participants.

4. Test information: date fireplace was received, date of tests, sampling methods used, and number of test-burns.

**31.203.14.6.2 Summary and Discussion of Results**.

1. Table of results: test-burn number, burn rate, particulate emission factor (in U. S. EPA Method 5H equivalents), efficiency (if determined), and averages (indicate which test-burns are used).

2. Summary of other data: test facility conditions, surface temperature averages, catalyst temperature averages, test-fuel charge weights, and test-burn times.

3. Discussion: specific test-burn problems and solutions.

**31.203.14.6.3 Process Description**.

1. Fireplace dimensions: volume, height, width, lengths (or other linear dimensions), weight, and hearth area.

2. Firebox configuration: air supply locations and operation, air supply introduction location, refractory location and dimensions, catalyst location, baffle and by-pass location and operation (include line drawings and photographs).

3. Process operation during test: air supply settings and adjustments, fuel bed adjustments, and draft.

4. Test fuel: test fuel properties (moisture and temperature), test fuel description (include line drawing or photograph), and test fuel charge density.

**31.203.14.6.4 Sampling Locations**. Describe sampling location relative to fireplace. Include line drawings and photographs.

**31.203.14.6.5 Sampling and Analytical Procedures**.

1. Sampling methods: brief reference to operational and sampling procedures, and optional and alternative procedures used.

2. Analytical methods: brief description of sample recovery and analysis procedures.

**(Insert as Page 596j)**

**31.203.14.6.6 Quality Control and Assurance Procedures and Results**.

1. Calibration procedures and results: Certification, sampling, and analysis procedures.

2. Test method quality control procedures: leak-checks, volume-meter checks, stratification (velocity) checks, and proportionality results.

**31.203.14.6.7 Appendices**.

1. Results and Example Calculations. Include complete summary tables and accompanying examples of all calculations.

2. Raw Data. Include copies of all uncorrected data sheets for sampling measurements, temperature records, and sample recovery data. Include copies of all burn rate and fireplace temperature data.

3. Sampling and Analytical Procedures. Include detailed description of procedures followed by laboratory personnel in conducting the certification test, emphasizing particularly, parts of the procedures differing from the prescribed methods (e.g., DOE approved alternatives).

4. Calibration Results. Summary of all calibrations, checks, and audits pertinent to certification test results including dates.

5. Participants. Test personnel, manufacturer representatives, and regulatory observers.

6. Sampling and Operation Records. Copies of uncorrected records of activities not included on raw data sheets (e.g., fireplace door open times and durations).

7. Additional Information. Fireplace manufacturer's written instructions for operation during the certification test and copies of the production-ready (print-ready) temporary and permanent labels required in Section 31.208 shall be included in the test report prepared by the test laboratory.

**31.203.14.7 References**.

1. Code of Federal Regulations, U. S. EPA Title 40, Part 60, Subpart AAA and Appendix A (40 CFR Part 60).

2. Barnett, S. G. and P. G. Fields, 1991, In-Home Performance of Exempt Pellet Stoves in Medford, Oregon, prepared for U. S. Department of Energy, Oregon Department of Energy, Tennessee Valley Authority, and Oregon Department of Environmental Quality, July 1991.

3. Barnett, S. G. and R. R. Roholt, 1990, In-Home Performance of Certified Pellet Stoves in Medford and Klamath Falls, Oregon, prepared for the U. S. Department of Energy, 1990.

4. Barnett, S. G., 1990, "Field Performance of Advanced Technology Woodstoves in Glens Falls, New York, 1988-1989", for New York State Energy Research and Development Authority, U. S. EPA, Coalition of Northeastern Governors, Canadian Combustion Research Laboratory, and the Wood Heating Alliance, December 1989.

**SECTION 31.204 — APPROVAL PROCEDURE FOR FIREPLACES.**

On or after the effective date of this regulation, a manufacturer or builder of a fireplace who wishes to have a fireplace model line or fireplace design designated as an approved (or certified) fireplace, shall submit to DOE for its review the following information:

**31.204.1** Manufacturer name and street address, model or design identification, construction specifications, and drawings of the firebox and required chimney system.

**31.204.2** A test report prepared in accordance with Section 31.203.14.6 showing that testing has been conducted by a DOE approved and U. S. EPA accredited laboratory, and that the arithmetically averaged particulate emission factors for that fireplace model line or design, tested in accordance with UBC Standard Section 31.202, does not exceed 7.3 g/kg (U. S. EPA Method 5H equivalent as determined in Section 31.203.12.6.3.2) for factory-built fireplace model lines or designs or 12.0 g/kg (U. S. EPA Method 5H equivalent as determined in Section 31.203.12.6.3.2) for new certified masonry fireplace model lines or designs. After January 1, 1999, particulate emission factors for factory-built and new certified masonry fireplace model lines or designs shall not exceed 7.3 g/kg (U. S. EPA Method 5H equivalents as determined in Section 31.203.12.6.3.2).

**SECTION 31.205 — APPROVAL OF NON-TESTED FIREPLACES.**

On or after the effective date of this regulation, DOE may grant approval for a fireplace model line or design that has not been tested pursuant to Section 31.204 upon submission of the following by the applicant:

**31.205.1** Manufacturer name and street address, model or design identification, construction specifications, and drawings of the internal assembly system.

**31.205.2** Documentation from an EPA accredited laboratory that the model is a fireplace within the definition of this regulation, has substantially the same core construction as a model already tested by a DOE approved and EPA accredited laboratory, and is substantially similar to the approved model in internal assembly design, combustion function, and probable emissions performance as listed in Section 31.204.2.

**SECTION 31.206 — APPROVAL THROUGH ALTERNATIVE TEST PROTOCOL.**

As provided in Section 31.202.4, an alternative testing protocol may be submitted by a DOE approved and EPA accredited laboratory for acceptance by DOE as equivalent to UBC Standard 31-2.

**SECTION 31.207 — APPROVAL TERMINATION.**

All fireplace model line or design approvals shall terminate five years from the approval date. Previously approved fireplace model line and/or design may be granted re-approval (re-certification) upon application to and review by DOE. No testing shall be required for fireplace model line or design re-approvals unless DOE determines that design changes have been incorporated into the fireplace that could adversely affect the emissions factor, or testing is otherwise stipulated by DOE.

DOE may revoke a fireplace model line or design approval certification if it is determined that the fireplaces being produced in a specific model line do not comply with the requirements of Section 31.200. Such a determination shall be based on all available evidence, including:

1. Test data from a retesting (audit test) of the original unit on which the certification test was conducted or a sample unit from the current model line;

2. A finding that the certification test was not valid;

3. A finding that the labeling of the fireplace does not comply with the requirements of Section 31.200;

4. Failure by the fireplace manufacturer (builder) to comply with reporting and record keeping requirements under Section 31.200;

5. Physical examination showing that a significant percentage of production units inspected are not similar in all material respects to the fireplace submitted for testing; or

6. Failure of the manufacturer to conduct a quality assurance program in conformity with Section 31.208.

Revocation of certification under this section shall not take effect until the manufacturer (builder) concerned has been given written notice by DOE setting forth the basis for the proposed determination and an opportunity to request a hearing.

**SECTION 31.208 — QUALITY CONTROL.**

Once within 30 days of each annual anniversary after the initial approval/certification, a DOE approved and U. S. EPA accredited laboratory shall inspect the most recently produced fireplace of an approved model line or design at its manufacturing location (site, if site-built) to document adherence to the approved/certified fireplace design specifications. If no fireplaces of an approved mode line or design were produced (built) during the previous 12 months, no inspection is required.

An inspection report for each approved fireplace model line or design must be submitted to DOE within 30 days after the inspection date. The inspection report shall include, as a minimum, the model identification and serial number of the fireplace inspected, the location where the model was inspected, the names of the manufacturer's and/or builder's representatives present, the date of inspection, and a description of any changes made to the approved fireplace model line or design since the last inspection. The U. S. EPA accredited laboratory which conducts the annual quality control inspection is responsible for auditing the content and format of all labels to be applied to approved fireplaces as stipulated in 31.209.

A fireplace model line or design shall be re-tested in accordance with Section 31.202 if it is determined during inspection that design changes have been incorporated into the approved/certified fireplace design which adversely affect the fireplace particulate emissions factor. Design elements which can affect fireplace particulate emissions include:

1. Grate placement and height;

2. Air supply minimum and maximum controls;

3. Usable hearth area; and

4. Firebox height, width, and length dimensions.

**SECTION 31.209 — PERMANENT LABEL, TEMPORARY LABEL AND OWNER'S MANUAL.**

**31.209.1 Labels and the Owner's Manual.** Labels and owner's manual shall be prepared and installed in all certified "For Sale" fireplaces as specified in U. S. EPA 40 CFR Part 60, Section 60.536. Information that shall be presented on all labels includes:

1. Manufacturer's or Builder's name, address, and phone number;

2. Model number and/or name;

3. Month and year of manufacture;

4. Starting and ending dates for the 5-year approval period;

5. If a fireplace was tested and approved with an emissions control device which is not an integral part of the fireplace structure, the label shall state that "The fireplace cannot be sold or installed without the specified emissions control device in place and operational.";

6. On certified fireplaces the statement: "This appliance has been tested and has demonstrated compliance with Washington State amendment to the UBC Standard, Chapter 31-2 requirements."

**SECTION 31.210 — LIST OF APPROVED FIREPLACES.**

DOE shall maintain a list of approved fireplace model lines and designs, and that list shall be available to the public.